Air Powered Crimp Tool Head
Operating Instruction Sheet and Specifications
Part No. 64005-0100
Engineering No. AT 1990
(Replaces 19283-0001)

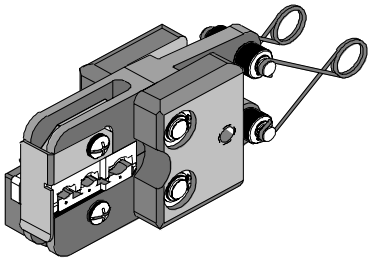

FEATURES

- Quick-change tool head for the 19279-0001 (AT-200)
- Tooling kit is interchangeable with other kits in the 64001 and 64003 Series
- A precision user-friendly terminal locator wire stop holds terminals in the proper crimping position for each of the three nests
- Insulation crimp adjustment allows a precise insulation crimp. To meet or exceed the requirements of UL, CSA and Military Class II
- 3-nested tool eliminates the need for additional tools
- Pneumatic powered crimp tools help reduce fatigue and discomfort from repetitive manual crimping

SCOPE

Avikrimp® and InsulKrimp® Terminals and Splices 10 – 22 AWG, (Rings, Spades, Hooks, Block Spades and Flanged Spades). Also terminates ends of step down butt splice 10-12 to 14 - 16 AWG and 14 - 16 to 18 - 22 AWG. This tool head is intended for use in the 19279-0001 (AT-200) either hand held or with optional bench adapter 19078-0307 (ATBA) and foot switch.

Testing

Mechanical

The tensile test, or pull test, is a means of evaluating the mechanical properties of the crimped connections. The following charts show the UL and Government specifications (MIL-T-7928) for various wire sizes. The tensile strength is shown in pounds and indicates the minimum acceptable force to break or separate the terminal from the conductor.

Wire Size (AWG)	*UL - 486 A	*UL – 486 C	**Military Class 2
22	8	8	15
20	13	10	19
18	20	10	38
16	30	15	50
14	50	25	70
12	70	35	110
10	80	40	150

*UL - 486 A - Terminals (Copper conductors only)
*UL - 486 C - Butt Splices, Parallel Splices
**Military Class 2– Military Approved Terminals only as listed

The following is a partial list of the product part numbers and their specifications that this tool is designed to run. We will be adding to this list and an up to date copy is available on www.molex.com.

Wire Size: 18 – 22 AWG 0.80 – 0.35mm²					
Terminal No.	Terminal Eng No. (REF)	Wire Strip Length		Insul. Dia. Max.	
		In	mm	In	mm
19023-0005	AMCT-2X	.312	7.93	.145	3.68
19023-0007	AMMCT-2X	.234	5.95		
19025-0001	AMCT-5	.312	7.93	.140	3.55
19025-0002	AMCT-57	.312	7.93	.140	3.55

Wire Size: 18 – 22 AWG 0.80 – 0.35mm²					
Terminal No.	Terminal	Wire Strip Length		Insul. Dia. Max.	
		In	mm	In	mm
19026-0003	AMCT-8	.312	7.93	.140	3.55
19026-0004	AMCT-87	.312	7.93		
19034-0001	A-769	.312	7.94	.145	3.68
19034-0002	A-259X	.312	7.94	.145	3.68

Wire Size: 18 – 22 AWG 0.80 – 0.35mm²					
Terminal No.	Terminal Eng No. (REF)	Wire Strip Length		Insul. Dia. Max.	
		In	mm	In	mm
19034-0005	A-269X	.312	7.94	.145	3.68
19035-0001	A-559	.312	7.94	.145	3.68
19035-0003	A-569	.312	7.94	.145	3.68
19036-0001	A-859	.312	7.94	.145	3.68
19036-0003	A-869	.312	7.94	.145	3.68
19054-0031	A-220-02X	.312	7.94	.145	3.68
19054-0032	A-220-04X	.312	7.94	.145	3.68
19054-0033	A-220-06X	.312	7.94	.145	3.68
19054-0035	A-221-06X	.312	7.94	.145	3.68
19054-0037	A-221-08X	.312	7.94	.145	3.68
19054-0039	A-221-10X	.312	7.94	.145	3.68
19054-0041	A-222-10X	.312	7.94	.145	3.68
19054-0042	A-222-14X	.312	7.94	.145	3.68
19054-0044	A-222-56X	.312	7.94	.145	3.68
19054-0046	A-226-10X	.312	7.94	.145	3.68
19054-0047	A-226-14X	.312	7.94	.145	3.68
19054-0048	A-226-38X	.312	7.94	.145	3.68
19054-0050	A-226-56X	.312	7.94	.145	3.68
19054-0051	A-232-04X	.312	7.94	.145	3.68
19054-0052	A-232-06X	.312	7.94	.145	3.68
19054-0054	A-232-08X	.312	7.94	.145	3.68
19054-0058	A-233-08X	.312	7.94	.145	3.68
19054-0059	A-233-10X	.312	7.94	.145	3.68
19054-0060	AB-225-10HD	.234	5.95	.175	4.44
19054-0061	AB-225-14HD	.234	5.95	.175	4.44
19054-0062	AB-225-56HD	.234	5.95	.175	4.44
19055-0001	A-620-02X	.312	7.94	.145	3.68
19055-0003	A-620-04X	.312	7.94	.145	3.68
19055-0006	A-620-06X	.312	7.94	.145	3.68
19055-0008	A-621-06X	.312	7.94	.145	3.68
19055-0011	A-621-08X	.312	7.94	.145	3.68
19055-0014	A-621-10X	.312	7.94	.145	3.68
19055-0016	A-622-10X	.312	7.94	.145	3.68
19055-0018	A-622-14X	.312	7.94	.145	3.68
19055-0020	A-622-56X	.312	7.94	.145	3.68
19055-0022	A-626-10X	.312	7.94	.145	3.68
19055-0023	A-626-14X	.312	7.94	.145	3.68
19055-0025	A-626-38X	.312	7.94	.145	3.68
19055-0027	A-626-56X	.312	7.94	.145	3.68
19055-0029	A-632-04X	.312	7.94	.145	3.68
19055-0031	A-632-06X	.312	7.94	.145	3.68
19055-0033	A-632-08X	.312	7.94	.145	3.68
19055-0038	A-633-10X	.312	7.94	.145	3.68
19057-0001	A-520-02	.312	7.94	.145	3.68
19057-0003	A-520-04	.312	7.94	.145	3.68
19057-0005	A-520-06	.312	7.94	.145	3.68
19057-0007	A-521-06	.312	7.94	.145	3.68
19057-0009	A-521-08	.312	7.94	.145	3.68
19057-0011	A-521-10	.312	7.94	.145	3.68
19057-0013	A-522-10	.312	7.94	.145	3.68
19057-0015	A-522-14	.312	7.94	.145	3.68
19057-0017	A-522-56	.312	7.94	.145	3.68
19057-0019	A-526-10	.312	7.94	.145	3.68
19057-0020	A-526-14	.312	7.94	.145	3.68
19057-0022	A-526-38	.312	7.94	.145	3.68
19057-0024	A-526-56	.312	7.94	.145	3.68
19057-0026	A-532-04	.312	7.94	.145	3.68
19057-0028	A-532-06	.312	7.94	.145	3.68
19057-0030	A-532-08	.312	7.94	.145	3.68
19057-0035	A-533-10	.312	7.94	.145	3.68
19058-0008	A-821-06	.312	7.94	.145	3.68
19070-0001	AA-2111-02X	.234	5.95	.145	3.68

Wire Size: 18 – 22 AWG 0.80 – 0.35mm²					
Terminal No.	Terminal	Wire Strip Length		Insul. Dia. Max.	
		In	mm	In	mm
19070-0003	AA-2111-04X	.234	5.95	.145	3.68
19070-0005	AA-220-02X	.234	5.95	.145	3.68
19070-0007	AA-220-04X	.234	5.95	.145	3.68
19070-0009	AA-220-06X	.234	5.95	.145	3.68
19070-0011	AA-221-06X	.234	5.95	.145	3.68
19070-0013	AA-221-08X	.234	5.95	.145	3.68
19070-0015	AA-221-10X	.234	5.95	.145	3.68
19070-0016	AA-221-10XR90	.234	5.95	.145	3.68
19070-0018	AA-221-10T45	.234	5.95	.145	3.68
19070-0019	AA-221-209X	.234	5.95	.145	3.68
19070-0021	AA-222-10X	.234	5.95	.145	3.68
19070-0023	AA-222-14X	.234	5.95	.145	3.68
19070-0026	AA-222-56X	.234	5.95	.145	3.68
19070-0029	AA-226-10X	.234	5.95	.145	3.68
19070-0031	AA-226-14X	.234	5.95	.145	3.68
19070-0033	AA-226-38X	.234	5.95	.145	3.68
19070-0036	AA-226-56X	.234	5.95	.145	3.68
19070-0038	AA-232-04X	.234	5.95	.145	3.68
19070-0040	AA-232-06X	.234	5.95	.145	3.68
19070-0044	AA-232-08X	.234	5.95	.145	3.68
19070-0051	AA-233-10X	.234	5.95	.145	3.68
19070-0394	AA-220-06XR90	.234	5.95	.145	3.68
19071-0001	AA-6111-02X	.234	5.95	.145	3.68
19071-0003	AA-6111-04X	.234	5.95	.145	3.68
19071-0005	AA-620-02X	.234	5.95	.145	3.68
19071-0007	AA-620-04X	.234	5.95	.145	3.68
19071-0009	AA-620-06X	.234	5.95	.145	3.68
19071-0011	AA-621-06X	.234	5.95	.145	3.68
19071-0013	AA-621-08X	.234	5.95	.145	3.68
19071-0015	AA-621-10X	.234	5.95	.145	3.68
19071-0017	AA-622-10X	.234	5.95	.145	3.68
19071-0019	AA-622-14X	.234	5.95	.145	3.68
19071-0021	AA-622-56X	.234	5.95	.145	3.68
19071-0023	AA-626-10X	.234	5.95	.145	3.68
19071-0024	AA-626-14X	.234	5.95	.145	3.68
19071-0026	AA-626-38X	.234	5.95	.145	3.68
19071-0028	AA-626-56X	.234	5.95	.145	3.68
19071-0030	AA-632-04X	.234	5.95	.145	3.68
19071-0032	AA-632-06X	.234	5.95	.145	3.68
19071-0034	AA-632-08X	.234	5.95	.145	3.68
19071-0040	AA-633-10X	.234	5.95	.145	3.68
19073-0001	AA-8111-02	.250	6.35	.140	3.55
19073-0003	AA-8111-04	.250	6.35	.140	3.55
19073-0005	AA-820-02	.250	6.35	.140	3.55
19073-0007	AA-820-04	.250	6.35	.140	3.55
19073-0009	AA-820-06	.250	6.35	.140	3.55
19073-0011	AA-821-06	.250	6.35	.140	3.55
19073-0013	A-821-08	.312	7.94	.145	3.68
19073-0013	AA-821-08	.250	6.35	.140	3.55
19073-0017	AA-821-10	.250	6.35	.140	3.55
19073-0020	AA-821-209	.250	6.35	.140	3.55
19073-0022	AA-822-10	.250	6.35	.140	3.55
19073-0024	AA-822-14	.250	6.35	.140	3.55
19073-0025	AA-822-14R90	.250	6.35	.140	3.55
19073-0027	AA-822-56	.250	6.35	.140	3.55
19073-0029	AA-826-10	.250	6.35	.140	3.55
19073-0030	AA-826-14	.250	6.35	.140	3.55
19073-0032	AA-826-38	.250	6.35	.140	3.55
19073-0034	AA-826-56	.250	6.35	.140	3.55
19073-0036	AA-832-04	.250	6.35	.140	3.55
19073-0038	AA-832-06	.250	6.35	.140	3.55
19073-0042	AA-832-08	.250	6.35	.140	3.55

Wire Size: 18 – 22 AWG 0.80 – 0.35mm²					
Terminal No.	Terminal Eng No. (REF)	Wire Strip Length		Insul. Dia. Max.	
		In	mm	In	mm
19073-0049	AA-833-10	.250	6.35	.140	3.55
19073-0051	AB-825-10HD	.234	5.95	.170	4.31
19073-0053	AB-825-14HD	.234	5.95	.170	4.31
19073-0055	AB-825-56HD	.234	5.95	.170	4.31
19073-0303	AA-832-06R90	.250	6.35	.140	3.55
19080-0001	A-2006-MSX	.312	7.94	.145	3.68
19081-0001	A-5006-MS	.312	7.94	.145	3.68
19089-0001	A-205-04X	.312	7.94	.145	3.68
19089-0002	A-205-06X	.312	7.94	.145	3.68
19089-0004	A-206-06X	.312	7.94	.145	3.68
19089-0005	A-206-08X	.312	7.94	.145	3.68
19089-0006	A-206-10X	.312	7.94	.145	3.68
19089-0007	A-214-04X	.312	7.94	.145	3.68
19089-0008	A-214-06X	.312	7.94	.145	3.68
19089-0009	A-214-08X	.312	7.94	.145	3.68
19089-0010	A-292-06X	.312	7.94	.145	3.68
19089-0012	A-292-08X	.312	7.94	.145	3.68
19089-0013	A-292-10X	.312	7.94	.145	3.68
19089-0014	A-295-06X	.312	7.94	.145	3.68
19089-0015	A-295-08X	.312	7.94	.145	3.68
19089-0016	A-295-10X	.312	7.94	.145	3.68
19089-0017	A-298-04X	.312	7.94	.145	3.68
19089-0018	A-298-06X	.312	7.94	.145	3.68
19089-0019	A-298-08X	.312	7.94	.145	3.68
19089-0020	A-298-10X	.312	7.94	.145	3.68
19090-0001	AA-205-04X	.234	5.95	.145	3.68
19090-0002	AA-205-06X	.234	5.95	.145	3.68
19090-0007	AA-2110-02X	.234	5.95	.145	3.68
19090-0009	AA-2110-04X	.234	5.95	.145	3.68
19090-0011	AA-214-04X	.234	5.95	.145	3.68
19090-0013	AA-214-06X	.234	5.95	.145	3.68
19090-0015	AA-214-08X	.234	5.95	.145	3.68
19090-0024	AA-292-06X	.234	5.95	.145	3.68
19090-0026	AA-292-08X	.234	5.95	.145	3.68
19090-0028	AA-292-10X	.234	5.95	.145	3.68
19090-0030	AA-295-06X	.234	5.95	.145	3.68
19090-0032	AA-295-08X	.234	5.95	.145	3.68
19090-0034	AA-295-10X	.234	5.95	.145	3.68
19090-0036	AA-298-04X	.234	5.95	.145	3.68
19090-0038	AA-298-06X	.234	5.95	.145	3.68
19090-0040	AA-298-08X	.234	5.95	.145	3.68
19090-0042	AA-298-10X	.234	5.95	.145	3.68
19091-0001	A-605-04X	.312	7.94	.145	3.68
19091-0003	A-605-06X	.312	7.94	.145	3.68
19091-0006	A-606-06X	.312	7.94	.145	3.68
19091-0008	A-606-08X	.312	7.94	.145	3.68
19091-0010	A-606-10X	.312	7.94	.145	3.68
19091-0012	A-614-04X	.312	7.94	.145	3.68
19091-0014	A-614-06X	.312	7.94	.145	3.68
19091-0016	A-614-08X	.312	7.94	.145	3.68
19091-0018	A-692-06X	.312	7.94	.145	3.68
19091-0020	A-692-08X	.312	7.94	.145	3.68
19091-0022	A-692-10X	.312	7.94	.145	3.68
19091-0024	A-695-06X	.312	7.94	.145	3.68
19091-0026	A-695-08X	.312	7.94	.145	3.68
19091-0028	A-695-10X	.312	7.94	.145	3.68
19091-0030	A-698-04X	.312	7.94	.145	3.68
19091-0032	A-698-06X	.312	7.94	.145	3.68
19091-0034	A-698-08X	.312	7.94	.145	3.68
19091-0036	A-698-10X	.312	7.94	.145	3.68
19092-0001	AA-605-04X	.234	5.95	.145	3.68
19092-0003	AA-605-06X	.234	5.95	.145	3.68

Wire Size: 18 – 22 AWG 0.80 – 0.35mm²					
Terminal No.	Terminal	Wire Strip Length		Insul. Dia. Max.	
		In	mm	In	mm
19092-0009	AA-6110-02X	.234	5.95	.145	3.68
19092-0011	AA-6110-04X	.234	5.95	.145	3.68
19092-0013	AA-614-04X	.234	5.95	.145	3.68
19092-0015	AA-614-06X	.234	5.95	.145	3.68
19092-0017	AA-614-08X	.234	5.95	.145	3.68
19092-0019	AA-692-06X	.234	5.95	.145	3.68
19092-0021	AA-692-08X	.234	5.95	.145	3.68
19092-0023	AA-692-10X	.234	5.95	.145	3.68
19092-0025	AA-695-06X	.234	5.95	.145	3.68
19092-0027	AA-695-08X	.234	5.95	.145	3.68
19092-0029	AA-695-10X	.234	5.95	.145	3.68
19092-0031	AA-698-04X	.234	5.95	.145	3.68
19092-0033	AA-698-06X	.234	5.95	.145	3.68
19092-0035	AA-698-08X	.234	5.95	.145	3.68
19092-0037	AA-698-10X	.234	5.95	.145	3.68
19094-0001	A-505-04	.312	7.94	.145	3.68
19094-0003	A-505-06	.312	7.94	.145	3.68
19094-0006	A-506-06	.312	7.94	.145	3.68
19094-0008	A-506-08	.312	7.94	.145	3.68
19094-0010	A-506-10	.312	7.94	.145	3.68
19094-0013	A-514-06	.312	7.94	.145	3.68
19094-0016	A-514-08	.312	7.94	.145	3.68
19094-0019	A-592-06	.312	7.94	.145	3.68
19094-0021	A-592-08	.312	7.94	.145	3.68
19094-0023	A-592-10	.312	7.94	.145	3.68
19094-0026	A-595-06	.312	7.94	.145	3.68
19094-0027	A-595-08	.312	7.94	.145	3.68
19094-0029	A-595-10	.312	7.94	.145	3.68
19094-0031	A-598-04	.312	7.94	.145	3.68
19094-0033	A-598-06	.312	7.94	.145	3.68
19094-0035	A-598-08	.312	7.94	.145	3.68
19094-0037	A-598-10	.312	7.94	.145	3.68
19095-0001	AA-805-04	.250	6.35	.140	3.55
19095-0003	AA-805-06	.250	6.35	.140	3.55
19095-0016	AA-814-04	.250	6.35	.145	3.68
19095-0018	AA-814-06	.250	6.35	.145	3.68
19095-0020	AA-814-08	.250	6.35	.145	3.68
19095-0036	AA-892-06	.250	6.35	.140	3.55
19095-0038	AA-892-08	.250	6.35	.140	3.55
19095-0040	AA-892-10	.250	6.35	.140	3.55
19095-0042	AA-895-06	.250	6.35	.140	3.55
19095-0044	AA-895-08	.250	6.35	.140	3.55
19095-0046	AA-895-10	.250	6.35	.140	3.55
19095-0048	AA-898-04	.250	6.35	.140	3.55
19095-0050	AA-898-06	.250	6.35	.140	3.55
19095-0052	AA-898-08	.250	6.35	.140	3.55
19095-0054	AA-898-10	.250	6.35	.140	3.55
19095-0142	AA-8110-02	.250	6.35	.140	3.55
19099-0001	AA-2190-06X	.234	5.95	.145	3.68
19099-0003	AA-2191-08X	.234	5.95	.145	3.68
19099-0005	AA-2192-10X	.234	5.95	.145	3.68
19099-0007	AA-2704-05X	.234	5.95	.145	3.68
19099-0009	AA-2704-06X	.234	5.95	.145	3.68
19099-0011	AA-2705-08X	.234	5.95	.145	3.68
19099-0012	AA-2706-10X	.234	5.95	.145	3.68
19099-0013	AA-2714-08X	.234	5.95	.145	3.68
19099-0015	AA-2715-10X	.234	5.95	.145	3.68
19099-0081	AA-2704-04X	.234	5.95	.145	3.68
19115-0001	AA-8190-06	.250	6.35	.143	3.63
19115-0003	AA-8191-08	.250	6.35	.143	3.63
19115-0005	AA-8192-10	.250	6.35	.143	3.63
19115-0007	AA-8704-05	.250	6.35	.140	3.55

Wire Size: 18 – 22 AWG 0.80 – 0.35mm²					
Terminal No.	Terminal Eng No. (REF)	Wire Strip Length		Insul. Dia. Max.	
		In	mm	In	mm
19115-0009	AA-8704-06	.250	6.35	.140	3.55
19115-0011	AA-8705-08	.234	5.95		
19115-0012	AA-8714-08	.250	6.35	.140	3.55
19115-0014	AA-8715-10	.250	6.35	.140	3.55
19115-0052	AA-8706-10	.234	5.95		
19119-0001	A-2108-02X	.312	7.94	.145	3.68
19119-0003	A-215-04X	.312	7.94	.145	3.68
19119-0004	A-215-06X	.312	7.94	.145	3.68
19119-0007	A-215-08X	.312	7.94	.145	3.68
19119-0010	A-215-10X	.312	7.94	.145	3.68
19119-0011	A-2461-04X	.312	7.94	.145	3.68
19119-0012	A-2461-06X	.312	7.94	.145	3.68
19119-0014	A-2461-08X	.312	7.94	.145	3.68
19119-0015	A-2461-10X	.312	7.94	.145	3.68
19119-0016	A-290-06X	.312	7.94	.145	3.68
19119-0017	A-290-08X	.312	7.94	.145	3.68
19119-0018	A-290-10X	.312	7.94	.145	3.68
19119-0019	A-293-06X	.312	7.94	.145	3.68
19119-0020	A-293-08X	.312	7.94	.145	3.68
19119-0021	A-293-10X	.312	7.94	.145	3.68
19119-0022	A-296-04X	.312	7.94	.145	3.68
19119-0023	A-296-06X	.312	7.94	.145	3.68
19119-0024	A-296-08X	.312	7.94	.145	3.68
19119-0095	A-290-10XX	.312	7.94	.145	3.68
19120-0003	A-615-04X	.312	7.94	.145	3.68
19120-0005	A-615-06X	.312	7.94	.145	3.68
19120-0007	A-615-08X	.312	7.94	.145	3.68
19120-0014	A-690-06X	.312	7.94	.145	3.68
19120-0016	A-690-08X	.312	7.94	.145	3.68
19120-0018	A-690-10X	.312	7.94	.145	3.68
19120-0020	A-693-06X	.312	7.94	.145	3.68
19120-0022	A-693-08X	.312	7.94	.145	3.68
19120-0024	A-693-10X	.312	7.94	.145	3.68
19120-0029	A-696-06X	.312	7.94	.145	3.68
19120-0031	A-696-08X	.312	7.94	.145	3.68
19121-0001	AA-2108-02X	.234	5.95	.145	3.68
19121-0002	AA-2108-04X	.234	5.95	.145	3.68
19121-0004	AA-215-04X	.234	5.95	.145	3.68
19121-0005	AA-215-06X	.234	5.95	.145	3.68
19121-0007	AA-215-08X	.234	5.95	.145	3.68
19121-0009	AA-215-10X	.234	5.95	.145	3.68
19121-0011	AA-2461-04X	.234	5.95	.145	3.68
19121-0012	AA-2461-06X	.234	5.95	.145	3.68
19121-0013	AA-2461-08X	.234	5.95	.145	3.68
19121-0014	AA-2461-10X	.234	5.95	.145	3.68
19121-0015	AA-290-06X	.234	5.95	.145	3.68
19121-0016	AA-290-08X	.234	5.95	.145	3.68
19121-0017	AA-290-10X	.234	5.95	.145	3.68
19121-0018	AA-293-06X	.234	5.95	.145	3.68
19121-0019	AA-293-08X	.234	5.95	.145	3.68
19121-0020	AA-293-10X	.234	5.95	.145	3.68
19121-0021	AA-296-04X	.234	5.95	.145	3.68
19121-0022	AA-296-06X	.234	5.95	.145	3.68
19121-0024	AA-296-08X	.234	5.95	.145	3.68
19122-0001	AA-6108-02X	.234	5.95	.145	3.68
19122-0003	AA-6108-04X	.234	5.95	.145	3.68
19122-0005	AA-615-04X	.234	5.95	.145	3.68
19122-0007	AA-615-06X	.234	5.95	.145	3.68
19122-0009	AA-615-08X	.234	5.95	.145	3.68
19122-0011	AA-690-06X	.234	5.95	.145	3.68
19122-0013	AA-690-08X	.234	5.95	.145	3.68
19122-0015	AA-690-10X	.234	5.95	.145	3.68

Wire Size: 18 – 22 AWG 0.80 – 0.35mm²					
Terminal No.	Terminal	Wire Strip Length		Insul. Dia. Max.	
		In	mm	In	mm
19122-0017	AA-693-06X	.234	5.95	.145	3.68
19122-0019	AA-693-08X	.234	5.95	.145	3.68
19122-0021	AA-693-10X	.234	5.95	.145	3.68
19122-0023	AA-696-04X	.234	5.95	.145	3.68
19122-0025	AA-696-06X	.234	5.95	.145	3.68
19125-0001	A-515-04	.312	7.94	.145	3.68
19125-0003	A-515-06	.312	7.94	.145	3.68
19125-0005	A-515-08	.312	7.94	.145	3.68
19125-0007	A-515-10	.312	7.94	.145	3.68
19125-0009	A-5461-04	.312	7.94	.145	3.68
19125-0010	A-5461-06	.312	7.94	.145	3.68
19125-0011	A-5461-08	.312	7.94	.145	3.68
19125-0012	A-5461-10	.312	7.94	.145	3.68
19125-0013	A-590-06	.312	7.94	.145	3.68
19125-0015	A-590-08	.312	7.94	.145	3.68
19125-0017	A-590-10	.312	7.94	.145	3.68
19125-0019	A-593-06	.312	7.94	.145	3.68
19125-0021	A-593-08	.312	7.94	.145	3.68
19125-0023	A-593-10	.312	7.94	.145	3.68
19125-0025	A-596-04	.312	7.94	.145	3.68
19125-0027	A-596-06	.312	7.94	.145	3.68
19125-0029	A-596-08	.312	7.94	.145	3.68
19126-0004	A-815-10	.312	7.94	.145	3.68
19126-0026	A-815-08	.312	7.94	.145	3.68
19127-0001	AA-8108-02	.250	6.35	.140	3.55
19127-0003	AA-8108-04	.250	6.35	.140	3.55
19127-0005	AA-815-04	.250	6.35	.143	3.63
19127-0007	AA-815-06	.250	6.35	.143	3.63
19127-0010	AA-815-08	.250	6.35	.143	3.63
19127-0012	AA-815-10	.250	6.35	.143	3.63
19127-0014	AA-8461-04	.250	6.35	.140	3.55
19127-0015	AA-8461-06	.250	6.35	.140	3.55
19127-0016	AA-8461-08	.250	6.35	.140	3.55
19127-0017	AA-8461-10	.250	6.35	.140	3.55
19127-0019	AA-890-06	.250	6.35	.140	3.55
19127-0021	AA-890-08	.250	6.35	.140	3.55
19127-0023	AA-890-10	.250	6.35	.140	3.55
19127-0025	AA-893-06	.250	6.35	.140	3.55
19127-0027	AA-893-08	.250	6.35	.140	3.55
19127-0029	AA-893-10	.250	6.35	.140	3.55
19127-0031	AA-896-04	.250	6.35	.140	3.55
19127-0033	AA-896-06	.250	6.35	.140	3.55
19127-0035	AA-896-08	.250	6.35	.140	3.55
19130-0002	A-2118-06X	.312	7.94	.145	3.68
19130-0003	A-2118-08X	.312	7.94	.145	3.68
19130-0004	A-234-04X	.312	7.94	.145	3.68
19130-0005	A-234-06X	.312	7.94	.145	3.68
19130-0006	A-234-08X	.312	7.94	.145	3.68
19130-0007	A-234-10X	.312	7.94	.145	3.68
19130-0008	A-238-04X	.312	7.94	.145	3.68
19130-0009	A-238-06X	.312	7.94	.145	3.68
19131-0027	AA-294-10X	.234	5.95	.145	3.68
19131-0028	AA-294-08X	.234	5.95	.145	3.68
19131-0029	AA-294-06X	.234	5.95	.145	3.68
19131-0031	AA-238-06X	.234	5.95	.145	3.68
19131-0033	AA-238-04X	.234	5.95	.145	3.68
19131-0034	AA-234-10X	.234	5.95	.145	3.68
19131-0036	AA-234-08X	.234	5.95	.145	3.68
19131-0038	AA-234-06X	.234	5.95	.145	3.68
19131-0039	AA-234-04X	.234	5.95	.145	3.68
19131-0040	AA-2118-08X	.234	5.95	.145	3.68
19131-0042	AA-2118-06X	.234	5.95	.145	3.68

Wire Size: 18 – 22 AWG 0.80 – 0.35mm²					
Terminal No.	Terminal Eng No. (REF)	Wire Strip Length		Insul. Dia. Max.	
		In	mm	In	mm
19131-0045	AA-2109-04X	.234	5.95	.145	3.68
19131-0047	AA-2109-02X	.234	5.95	.145	3.68
19133-0001	AA-634-04X	.234	5.95	.145	3.68
19133-0002	AA-634-06X	.234	5.95	.145	3.68
19133-0003	AA-634-08X	.234	5.95	.145	3.68
19133-0004	AA-634-10X	.234	5.95	.145	3.68
19137-0002	A-5118-06	.312	7.94	.145	3.68
19137-0003	A-5118-08	.312	7.94	.145	3.68
19137-0004	A-534-04	.312	7.94	.145	3.68
19137-0005	A-534-06	.312	7.94	.145	3.68
19137-0006	A-534-08	.312	7.94	.145	3.68
19137-0007	A-534-10	.312	7.94	.145	3.68
19137-0008	A-538-04	.312	7.94	.145	3.68
19137-0009	A-538-06	.312	7.94	.145	3.68
19137-0010	A-591-06	.312	7.94	.145	3.68
19137-0011	A-591-08	.312	7.94	.145	3.68
19137-0012	A-591-10	.312	7.94	.145	3.68
19137-0013	A-594-06	.312	7.94	.145	3.68
19137-0014	A-594-08	.312	7.94	.145	3.68
19137-0015	A-594-10	.312	7.94	.145	3.68
19137-0016	A-597-04	.312	7.94	.145	3.68
19137-0017	A-597-06	.312	7.94	.145	3.68
19137-0018	A-597-08	.312	7.94	.145	3.68
19139-0001	AA-8109-02	.250	6.35	.143	3.63
19139-0003	AA-8109-04	.250	6.35	.143	3.63
19139-0006	AA-8118-06	.250	6.35	.143	3.63
19139-0008	AA-8118-08	.250	6.35	.143	3.63
19139-0009	AA-834-04	.250	6.35	.140	3.55
19139-0011	AA-834-06	.250	6.35	.140	3.55
19139-0013	AA-834-08	.250	6.35	.140	3.55
19139-0015	AA-834-10	.250	6.35	.140	3.55
19139-0016	AA-838-04	.250	6.35	.140	3.55
19139-0018	AA-838-06	.250	6.35	.140	3.55
19139-0020	AA-891-06	.250	6.35	.140	3.55
19139-0022	AA-891-08	.250	6.35	.140	3.55
19139-0024	AA-891-10	.250	6.35	.140	3.55
19139-0026	AA-894-06	.250	6.35	.140	3.55
19139-0028	AA-894-08	.250	6.35	.140	3.55
19139-0030	A-894-10	.312	7.94	.145	3.68
19139-0030	AA-894-10	.250	6.35	.140	3.55
19139-0032	AA-897-04	.250	6.35	.140	3.55
19139-0034	AA-897-06	.250	6.35	.140	3.55
19139-0036	AA-897-08	.250	6.35	.140	3.55
19142-0003	A-235-06X	.312	7.94	.145	3.68
19142-0005	A-235-08X	.312	7.94	.145	3.68
19142-0007	A-235-10X	.312	7.94	.145	3.68
19142-0010	A-291-06X	.312	7.94	.145	3.68
19142-0011	A-291-08X	.312	7.94	.145	3.68
19142-0012	A-291-10X	.312	7.94	.145	3.68
19142-0013	A-294-06X	.312	7.94	.145	3.68
19142-0014	A-294-08X	.312	7.94	.145	3.68
19142-0015	A-294-10X	.312	7.94	.145	3.68
19142-0016	A-297-04X	.312	7.94	.145	3.68
19142-0017	A-297-06X	.312	7.94	.145	3.68
19142-0018	A-297-08X	.312	7.94	.145	3.68
19143-0001	A-634-04X	.312	7.94	.145	3.68
19143-0003	A-634-06X	.312	7.94	.145	3.68
19143-0006	A-634-08X	.312	7.94	.145	3.68
19143-0008	A-634-10X	.312	7.94	.145	3.68
19143-0010	A-635-06X	.312	7.94	.145	3.68
19143-0012	A-635-08X	.312	7.94	.145	3.68
19143-0014	A-635-10X	.312	7.94	.145	3.68

Wire Size: 18 – 22 AWG 0.80 – 0.35mm²					
Terminal No.	Terminal	Wire Strip Length		Insul. Dia. Max.	
		In	mm	In	mm
19143-0015	A-638-04X	.312	7.94	.145	3.68
19143-0018	A-638-06X	.312	7.94	.145	3.68
19143-0021	A-691-06X	.312	7.94	.145	3.68
19143-0023	A-691-08X	.312	7.94	.145	3.68
19143-0025	A-691-10X	.312	7.94	.145	3.68
19143-0027	A-694-06X	.312	7.94	.145	3.68
19143-0029	A-694-08X	.312	7.94	.145	3.68
19143-0031	A-694-10X	.312	7.94	.145	3.68
19143-0033	A-697-04X	.312	7.94	.145	3.68
19143-0035	A-697-06X	.312	7.94	.145	3.68
19143-0037	A-697-08X	.312	7.94	.145	3.68
19144-0001	AA-235-06X	.234	5.95	.145	3.68
19144-0003	AA-235-08X	.234	5.95	.145	3.68
19144-0005	AA-235-10X	.234	5.95	.145	3.68
19144-0007	AA-291-06X	.234	5.95	.145	3.68
19144-0008	AA-291-08X	.234	5.95	.145	3.68
19144-0009	AA-291-10X	.234	5.95	.145	3.68
19144-0010	AA-297-04X	.234	5.95	.145	3.68
19144-0011	AA-297-06X	.234	5.95	.145	3.68
19144-0012	AA-297-08X	.234	5.95	.145	3.68
19145-0001	AA-6109-02X	.234	5.95	.145	3.68
19145-0003	AA-6109-04X	.234	5.95	.145	3.68
19145-0011	AA-635-06X	.234	5.95	.145	3.68
19145-0013	AA-635-08X	.234	5.95	.145	3.68
19145-0015	AA-635-10X	.234	5.95	.145	3.68
19145-0017	AA-638-04X	.234	5.95	.145	3.68
19145-0019	AA-638-06X	.234	5.95	.145	3.68
19145-0022	AA-691-06X	.234	5.95	.145	3.68
19145-0024	AA-691-08X	.234	5.95	.145	3.68
19145-0026	AA-691-10X	.234	5.95	.145	3.68
19145-0028	AA-694-06X	.234	5.95	.145	3.68
19145-0030	AA-694-08X	.234	5.95	.145	3.68
19145-0032	AA-694-10X	.234	5.95	.145	3.68
19145-0034	AA-697-04X	.234	5.95	.145	3.68
19145-0036	AA-697-06X	.234	5.95	.145	3.68
19145-0038	AA-697-08X	.234	5.95	.145	3.68
19153-0002	AMCT-2NF	.312	7.93		
19154-0002	A-2450V	.312	7.94	.145	3.68
19154-0004	A-245X	.312	7.94	.145	3.68
19154-0005	A-245X-B	.312	7.94	.145	3.68
19154-0009	A-L245X	.281	7.14	.145	3.68
19154-0011	AS-V-345X	.281	7.14	.145	3.68
19164-0009	SA-259	.281	7.14		
19164-0010	SA-269	.281	7.14		
19171-0001	A-210-06X	.312	7.94	.145	3.68
19171-0003	A-210-08X	.312	7.94	.145	3.68
19171-0005	A-210-10X	.312	7.94	.145	3.68
19174-0001	A-510-06	.312	7.94	.145	3.68
19174-0003	A-510-08	.312	7.94	.145	3.68
19174-0005	A-510-10	.312	7.94	.145	3.68
19175-0001	A-610-06X	.312	7.94	.145	3.68
19175-0003	A-610-08X	.312	7.94	.145	3.68
19175-0005	A-610-10X	.312	7.94	.145	3.68
19179-0002	AA-210-06X	.234	5.95	.145	3.68
19179-0004	AA-210-08X	.234	5.95	.145	3.68
19179-0006	AA-210-10X	.234	5.95	.145	3.68
19182-0001	AA-610-06X	.234	5.95	.145	3.68
19182-0003	AA-610-08X	.234	5.95	.145	3.68
19182-0005	AA-610-10X	.234	5.95	.145	3.68
19183-0001	AA-810-06	.250	6.35	.140	3.55
19183-0003	AA-810-08	.250	6.35	.140	3.55
19183-0005	AA-810-10	.250	6.35	.140	3.55

Wire Size: 18 – 22 AWG 0.80 – 0.35mm²					
Terminal No.	Terminal Eng No. (REF)	Wire Strip Length		Insul. Dia. Max.	
		In	mm	In	mm
19196-0005	A-535-06	.312	7.94	.145	3.68
19196-0007	A-535-08	.312	7.94	.145	3.68
19196-0009	A-535-10	.312	7.94	.145	3.68
19197-0002	A-834-08	.312	7.94	.145	3.68
19197-0006	A-835-08	.312	7.94	.145	3.68
19197-0043	A-838-06	.312	7.94	.145	3.68
19198-0004	AA-835-08	.250	6.35	.140	3.55
19198-0006	AA-835-10	.250	6.35	.140	3.55
19198-0070	AA-835-06	.250	6.35	.140	3.55
19199-0013	A-845	.312	7.94	.145	3.68
19200-0002	AS-845	.312	7.94	.140	3.55
19202-0010	AS-932	.312	7.93	.161	4.08
19202-0011	AS-932-DK	.312	7.93	.161	4.08
19202-0062	A-945	.312	7.94	.145	3.68
19202-0063	A-945-DK	.312	7.94	.145	3.68
19204-0003	A-2XCX	.312	7.94		
19204-0004	A-2YCX	.312	7.94		
19204-0008	A-5XC	.312	7.94	.145	3.68
19204-0009	A-5YC	.312	7.94	.145	3.68
19206-0002	AS-V-302X	.281	7.14	.150	3.81
19207-0002	AS-N-302	.281	7.14		
19212-0003	WP-2218X	.187	4.76	.145	3.68
19213-0003	WP-5218	.187	4.76	.140	3.55
19213-0009	WP-8218	.187	4.76	.140	3.55

MILITARY CLASS 2 Wire Size: 18 – 22 AWG 0.80 – 0.35mm²					
Terminal No.	Terminal Eng No. (REF)	Wire Strip Length		Insul. Dia. Max.	
		In	mm	In	mm
19095-0022	AA-880-1	.250	6.35	.140	3.57
19095-0024	AA-881-1	.250	6.35	.140	3.57
19095-0026	AA-882-1	.250	6.35	.140	3.57
19095-0028	AA-883-1	.250	6.35	.140	3.57
19095-0030	AA-884-1	.250	6.35	.140	3.57
19095-0032	AA-885-1	.250	6.35	.140	3.57
19095-0034	AA-886-1	.250	6.35	.140	3.57

Wire Size: 14 – 16 AWG 2.00 – 1.30mm²					
Terminal No.	Terminal Eng No. (REF)	Wire Strip Length		Insul. Dia. Max.	
		In	mm	In	mm
19023-0012	MCT-2X	.312	7.93	.175	4.44
19023-0016	MMCT-2X	.234	5.95		
19025-0007	MCT-5	.312	7.93	.170	4.31
19025-0008	MCT-57	.312	7.93	.170	4.31
19025-0028	MMCT-5	.234	5.95		
19026-0006	MCT-8	.312	7.93		
19026-0008	MMCT-8	.234	5.95		
19034-0004	B-789	.250	6.35		
19034-0007	B-279X	.312	7.94	.175	4.44
19034-0009	B-289X	.312	7.94		
19035-0005	B-579	.312	7.94	.170	4.31
19035-0006	B-579B	.312	7.94	.170	4.31
19035-0009	B-589	.312	7.94	.170	4.31
19035-0010	B-589B	.312	7.94	.170	4.31
19036-0006	B-879	.312	7.94	.170	4.31
19036-0008	B-889	.312	7.94	.170	4.31
19054-0063	B-201-12HDX	.312	7.94		
19054-0066	B-201-38HDX	.312	7.94		
19054-0070	B-201-76HDX	.312	7.94		
19054-0072	B-218-10X	.312	7.94	.175	4.44
19054-0073	B-218-14X	.312	7.94	.175	4.44
19054-0075	B-218-38X	.312	7.94	.175	4.44

Wire Size: 14 – 16 AWG 2.00 – 1.30mm²					
Terminal No.	Terminal	Wire Strip Length		Insul. Dia. Max.	
		In	mm	In	mm
19054-0077	B-218-56X	.312	7.94	.175	4.44
19054-0079	B-223-02X	.312	7.94	.175	4.44
19054-0080	B-223-04X	.312	7.94	.175	4.44
19054-0081	B-223-06X	.312	7.94	.175	4.44
19054-0083	B-223-08X	.312	7.94	.175	4.44
19054-0085	B-225-10X	.312	7.94	.175	4.44
19054-0086	B-225-14X	.312	7.94	.175	4.44
19054-0088	B-225-56X	.312	7.94	.175	4.44
19054-0090	B-228-06HDX	.312	7.94		
19054-0092	B-228-08HDX	.312	7.94		
19054-0094	B-228-10HDX	.312	7.94		
19054-0096	B-230-10HDX	.312	7.94		
19054-0097	B-230-14HDX	.312	7.94		
19054-0098	B-230-56HDX	.312	7.94		
19054-0107	B-237-04X	.312	7.94	.175	4.44
19054-0108	B-237-06X	.312	7.94	.175	4.44
19054-0110	B-237-08X	.312	7.94	.175	4.44
19054-0111	B-237-08XR90	.312	7.94	.175	4.44
19054-0113	B-237-10X	.312	7.94	.175	4.44
19054-0114	B-237-10XR90	.312	7.94	.175	4.44
19054-0116	B-239-04X	.312	7.94	.175	4.44
19054-0117	B-239-06X	.312	7.94	.175	4.44
19054-0118	B-239-08X	.312	7.94	.175	4.44
19054-0119	B-239-10X	.312	7.94	.175	4.44
19054-0126	B-240-38HDX	.312	7.94		
19055-0046	B-618-10X	.312	7.94	.175	4.44
19055-0048	B-618-14X	.312	7.94	.175	4.44
19055-0050	B-618-38X	.312	7.94	.175	4.44
19055-0052	B-618-56X	.312	7.94	.175	4.44
19055-0054	B-623-02X	.312	7.94	.175	4.44
19055-0056	B-623-04X	.312	7.94	.175	4.44
19055-0059	B-623-06X	.312	7.94	.175	4.44
19055-0061	B-623-08X	.312	7.94	.175	4.44
19055-0063	B-625-10X	.312	7.94	.175	4.44
19055-0066	B-625-14X	.312	7.94	.175	4.44
19055-0068	B-625-56X	.312	7.94	.175	4.44
19055-0082	B-630-56HDX	.312	7.94	.250	6.35
19055-0095	B-637-04X	.312	7.94	.175	4.44
19055-0097	B-637-06X	.312	7.94	.175	4.44
19055-0100	B-637-08X	.312	7.94	.175	4.44
19055-0103	B-637-10X	.312	7.94	.175	4.44
19055-0105	B-639-04X	.312	7.94	.175	4.44
19055-0107	B-639-06X	.312	7.94	.175	4.44
19055-0109	B-639-08X	.312	7.94	.175	4.44
19055-0111	B-639-10X	.312	7.94	.175	4.44
19057-0042	B-518-10	.312	7.94	.170	4.31
19057-0044	B-518-14	.312	7.94	.170	4.31
19057-0046	B-518-38	.312	7.94	.170	4.31
19057-0048	B-518-56	.312	7.94	.170	4.31
19057-0050	B-523-02	.312	7.94	.170	4.31
19057-0052	B-523-04	.312	7.94	.170	4.31
19057-0054	B-523-06	.312	7.94	.170	4.31
19057-0056	B-523-08	.312	7.94	.170	4.31
19057-0058	B-525-10	.312	7.94	.170	4.31
19057-0060	B-525-14	.312	7.94	.170	4.31
19057-0062	B-525-56	.312	7.94	.170	4.31
19057-0086	B-537-04	.312	7.94	.170	4.31
19057-0088	B-537-06	.312	7.94	.170	4.31
19057-0090	B-537-08	.312	7.94	.170	4.31
19057-0093	B-537-10	.312	7.94	.170	4.31
19057-0096	B-539-04	.312	7.94	.170	4.31
19057-0098	B-539-06	.312	7.94	.170	4.31

Wire Size: 14 – 16 AWG 2.00 – 1.30mm²					
Terminal No.	Terminal Eng No. (REF)	Wire Strip Length		Insul. Dia. Max.	
		In	mm	In	mm
19057-0100	B-539-08	.312	7.94	.170	4.31
19057-0102	B-539-10	.312	7.94	.170	4.31
19058-0058	B-830-10HDRR	.312	7.94		
19058-0064	B-830-14HD-03	.312	7.94		
19058-0066	B-830-14HDRR	.312	7.94		
19058-0073	B-830-56HD-03	.312	7.94		
19058-0075	B-830-56HDRR	.312	7.94		
19058-0104	B-839-06	.312	7.94	.170	4.31
19058-0155	TT-1614HD	.375	9.53		
19058-0200	B-823-08	.312	7.94	.170	4.31
19070-0054	BB-218-10X	.234	5.95	.175	4.41
19070-0057	BB-218-14X	.234	5.95	.175	4.41
19070-0059	BB-218-38X	.234	5.95	.175	4.41
19070-0063	BB-218-56X	.234	5.95	.175	4.41
19070-0065	BB-223-02X	.234	5.95	.175	4.41
19070-0067	BB-223-04X	.234	5.95	.175	4.41
19070-0069	BB-223-06X	.234	5.95	.175	4.41
19070-0071	BB-223-08X	.234	5.95	.175	4.41
19070-0073	BB-225-10X	.234	5.95	.175	4.41
19070-0075	BB-225-14X	.234	5.95	.175	4.41
19070-0078	BB-225-56X	.234	5.95	.175	4.41
19070-0081	BB-237-04X	.234	5.95	.175	4.41
19070-0083	BB-237-06X	.234	5.95	.175	4.41
19070-0086	BB-237-08X	.234	5.95	.175	4.41
19070-0090	BB-237-10X	.234	5.95	.175	4.44
19070-0095	BB-239-04X	.234	5.95	.175	4.44
19070-0097	BB-239-06X	.234	5.95	.175	4.44
19070-0099	BB-239-08X	.234	5.95	.175	4.44
19070-0102	BB-239-10X	.234	5.95	.175	4.44
19070-0397	BB-237-10XR90	.234	5.95	.175	4.44
19071-0042	BB-618-10X	.234	5.95	.175	4.44
19071-0044	BB-618-14X	.234	5.95	.175	4.44
19071-0046	BB-618-38X	.234	5.95	.175	4.44
19071-0049	BB-618-56X	.234	5.95	.175	4.44
19071-0051	BB-623-02X	.234	5.95	.175	4.44
19071-0053	BB-623-04X	.234	5.95	.175	4.44
19071-0055	BB-623-06X	.234	5.95	.175	4.44
19071-0057	BB-623-08X	.234	5.95	.175	4.44
19071-0060	BB-625-10X	.234	5.95	.175	4.44
19071-0062	BB-625-14X	.234	5.95	.175	4.44
19071-0064	BB-625-56X	.234	5.95	.175	4.44
19071-0066	BB-637-04X	.234	5.95	.175	4.44
19071-0068	BB-637-06X	.234	5.95	.175	4.44
19071-0070	BB-637-08X	.234	5.95	.175	4.44
19071-0072	BB-637-10X	.234	5.95	.175	4.44
19071-0075	BB-639-04X	.234	5.95	.175	4.44
19071-0077	BB-639-06X	.234	5.95	.175	4.44
19071-0079	BB-639-08X	.234	5.95	.175	4.44
19071-0081	BB-639-10X	.234	5.95	.175	4.44
19073-0059	BB-818-38	.250	6.35	.170	4.31
19073-0061	BB-818-56	.250	6.35	.170	4.31
19073-0063	BB-823-02	.250	6.35	.170	4.31
19073-0065	BB-823-04	.250	6.35	.170	4.31
19073-0067	BB-823-06	.250	6.35	.170	4.31
19073-0072	BB-823-08	.250	6.35	.170	4.31
19073-0074	BB-825-10	.250	6.35	.170	4.31
19073-0076	BB-825-14	.250	6.35	.170	4.31
19073-0079	BB-825-56	.250	6.35	.170	4.31
19073-0081	BB-837-04	.250	6.35	.170	4.31
19073-0083	BB-837-06	.250	6.35	.170	4.31
19073-0085	BB-837-08	.250	6.35	.170	4.31
19073-0087	BB-837-10	.250	6.35	.170	4.31

Wire Size: 14 – 16 AWG 2.00 – 1.30mm²					
Terminal No.	Terminal	Wire Strip Length		Insul. Dia. Max.	
		In	mm	In	mm
19073-0094	BB-839-08	.250	6.35	.170	4.31
19073-0097	BB-839-10	.250	6.35	.170	4.31
19073-0301	BB-818-14	.250	6.35	.170	4.31
19080-0003	B-2006-MSX	.312	7.94	.170	4.31
19081-0003	B-5006-MS	.312	7.94		
19089-0021	B-208-04X	.312	7.94	.175	4.44
19089-0022	B-208-06X	.312	7.94	.175	4.44
19089-0025	B-209-06X	.312	7.94	.175	4.44
19089-0026	B-209-08X	.312	7.94	.175	4.44
19089-0027	B-209-10X	.312	7.94	.175	4.44
19089-0028	B-213-04X	.312	7.94	.175	4.44
19089-0029	B-213-06X	.312	7.94	.175	4.44
19089-0030	B-213-08X	.312	7.94	.175	4.44
19089-0035	B-282-06X	.312	7.94	.175	4.44
19089-0036	B-282-08X	.312	7.94	.175	4.44
19089-0037	B-282-10X	.312	7.94	.175	4.44
19089-0038	B-285-06X	.312	7.94	.175	4.44
19089-0039	B-285-08X	.312	7.94	.175	4.44
19089-0040	B-285-10X	.312	7.94	.175	4.44
19089-0041	B-288-04X	.312	7.94	.175	4.44
19089-0042	B-288-06X	.312	7.94	.175	4.44
19089-0043	B-288-08X	.312	7.94	.175	4.44
19089-0044	B-288-10X	.312	7.94	.175	4.44
19090-0044	BB-213-04X	.234	5.95	.175	4.41
19090-0046	BB-213-06X	.234	5.95	.175	4.41
19090-0048	BB-213-08X	.234	5.95	.175	4.41
19090-0052	BB-282-06X	.234	5.95	.175	4.44
19090-0054	BB-282-08X	.234	5.95	.175	4.44
19090-0056	BB-282-10X	.234	5.95	.175	4.44
19090-0060	BB-288-04X	.234	5.95	.175	4.44
19090-0061	BB-285-06X	.234	5.95	.175	4.44
19090-0063	BB-285-08X	.234	5.95	.175	4.44
19090-0065	BB-285-10X	.234	5.95	.175	4.44
19090-0071	BB-288-06X	.234	5.95	.175	4.44
19090-0073	BB-288-08X	.234	5.95	.175	4.44
19090-0075	BB-288-10X	.234	5.95	.175	4.44
19091-0038	B-608-04X	.312	7.94	.175	4.44
19091-0040	B-608-06X	.312	7.94	.175	4.44
19091-0044	B-609-06X	.312	7.94	.175	4.44
19091-0046	B-609-08X	.312	7.94	.175	4.44
19091-0048	B-609-10X	.312	7.94	.175	4.44
19091-0050	B-613-04X	.312	7.94	.175	4.44
19091-0052	B-613-06X	.312	7.94	.175	4.44
19091-0054	B-613-08X	.312	7.94	.175	4.44
19091-0060	B-682-06X	.312	7.94	.175	4.44
19091-0062	B-682-08X	.312	7.94	.175	4.44
19091-0062	B-682-10X	.312	7.94	.175	4.44
19091-0067	B-685-06X	.312	7.94	.175	4.44
19091-0069	B-685-08X	.312	7.94	.175	4.44
19091-0071	B-685-10X	.312	7.94	.175	4.44
19091-0073	B-688-04X	.312	7.94	.175	4.44
19091-0075	B-688-06X	.312	7.94	.175	4.44
19091-0077	B-688-08X	.312	7.94	.175	4.44
19091-0079	B-688-10X	.312	7.94	.175	4.44
19092-0039	BB-613-04X	.234	5.95	.175	4.44
19092-0041	BB-613-06X	.234	5.95	.175	4.44
19092-0043	BB-613-08X	.234	5.95	.175	4.44
19092-0045	BB-682-06X	.234	5.95	.175	4.44
19092-0047	BB-682-08X	.234	5.95	.175	4.44
19092-0049	BB-682-10X	.234	5.95	.175	4.44
19092-0051	BB-685-06X	.234	5.95	.175	4.44
19092-0053	BB-685-08X	.234	5.95	.175	4.44

Wire Size: 14 – 16 AWG 2.00 – 1.30mm²					
Terminal No.	Terminal Eng No. (REF)	Wire Strip Length		Insul. Dia. Max.	
		In	mm	In	mm
19092-0055	BB-685-10X	.234	5.95	.175	4.44
19092-0057	BB-688-04X	.234	5.95	.175	4.44
19092-0059	BB-688-06X	.234	5.95	.175	4.44
19092-0061	BB-688-08X	.234	5.95	.175	4.44
19092-0063	BB-688-10X	.234	5.95	.175	4.44
19094-0039	B-508-04	.312	7.94	.170	4.31
19094-0041	B-508-06	.312	7.94	.170	4.31
19094-0045	B-509-06	.312	7.94	.170	4.31
19094-0047	B-509-08	.312	7.94	.170	4.31
19094-0049	B-509-10	.312	7.94	.170	4.31
19094-0051	B-513-04	.312	7.94	.170	4.31
19094-0053	B-513-06	.312	7.94	.170	4.31
19094-0055	B-513-08	.312	7.94	.170	4.31
19094-0061	B-582-06	.312	7.94	.170	4.31
19094-0063	B-582-08	.312	7.94	.170	4.31
19094-0065	B-582-10	.312	7.94	.170	4.31
19094-0067	B-585-06	.312	7.94	.170	4.31
19094-0069	B-585-08	.312	7.94	.170	4.31
19094-0071	B-585-10	.312	7.94	.170	4.31
19094-0073	B-588-04	.312	7.94	.170	4.31
19094-0075	B-588-06	.312	7.94	.170	4.31
19094-0077	B-588-08	.312	7.94	.170	4.31
19094-0079	B-588-10	.312	7.94	.170	4.31
19095-0056	BB-813-04	.250	6.35	.170	4.31
19095-0058	BB-813-06	.250	6.35	.170	4.31
19095-0060	BB-813-08	.250	6.35	.170	4.31
19095-0068	BB-882-06	.250	6.35	.170	4.31
19095-0070	BB-882-08	.250	6.35	.170	4.31
19095-0072	BB-882-10	.250	6.35	.170	4.31
19095-0081	BB-885-06	.250	6.35	.170	4.31
19095-0083	BB-885-08	.250	6.35	.170	4.31
19095-0085	BB-885-10	.250	6.35	.170	4.31
19095-0091	BB-888-04	.250	6.35	.170	4.31
19095-0093	BB-888-06	.250	6.35	.170	4.31
19095-0095	BB-888-08	.250	6.35	.170	4.31
19095-0097	BB-888-10	.250	6.35	.170	4.31
19095-0135	BB-883-10	.250	6.35	.170	4.31
19095-0138	BB-886-08	.250	6.35	.170	4.31
19095-0140	BB-887-06	.250	6.35	.170	4.31
19095-0141	BB-887-08	.250	6.35	.170	4.31
19099-0017	BB-2193-06X	.234	5.95	.175	4.41
19099-0019	BB-2194-08X	.234	5.95	.175	4.41
19099-0022	BB-2195-10X	.234	5.95	.175	4.41
19099-0025	BB-2707-05X	.234	5.95	.175	4.44
19099-0027	BB-2707-06X	.234	5.95	.175	4.44
19099-0032	BB-2716-08X	.234	5.95	.175	4.44
19099-0034	BB-2717-10X	.234	5.95	.175	4.44
19115-0016	BB-8193-06	.250	6.35	.175	4.44
19115-0018	BB-8194-08	.250	6.35	.175	4.44
19115-0020	BB-8195-10	.250	6.35	.175	4.44
19115-0022	BB-8707-05	.250	6.35	.175	4.44
19115-0024	BB-8707-06	.250	6.35	.175	4.44
19115-0031	BB-8717-10	.250	6.35	.175	4.44
19115-0079	BB-8716-08	.250	6.35	.175	4.44
19119-0025	B-216-04X	.312	7.94	.175	4.44
19119-0026	B-216-06X	.312	7.94	.175	4.44
19119-0029	B-216-08X	.312	7.94	.175	4.44
19119-0032	B-216-10X	.312	7.94	.175	4.44
19119-0041	B-280-06X	.312	7.94	.175	4.44
19119-0042	B-280-08X	.312	7.94	.175	4.44
19119-0043	B-280-10X	.312	7.94	.175	4.44
19119-0044	B-283-06X	.312	7.94	.175	4.44

Wire Size: 14 – 16 AWG 2.00 – 1.30mm²					
Terminal No.	Terminal	Wire Strip Length		Insul. Dia. Max.	
		In	mm	In	mm
19119-0045	B-283-08X	.312	7.94	.175	4.44
19119-0046	B-283-10X	.312	7.94	.175	4.44
19119-0047	B-286-04X	.312	7.94	.175	4.44
19119-0048	B-286-06X	.312	7.94	.175	4.44
19119-0049	B-286-08X	.312	7.94	.175	4.44
19120-0033	B-616-04X	.312	7.94	.175	4.44
19120-0035	B-616-06X	.312	7.94	.175	4.44
19120-0037	B-616-08X	.312	7.94	.175	4.44
19120-0039	B-616-10X	.312	7.94	.175	4.44
19120-0051	B-680-06X	.312	7.94	.175	4.44
19120-0053	B-680-08X	.312	7.94	.175	4.44
19120-0055	B-680-10X	.312	7.94	.175	4.44
19120-0057	B-683-06X	.312	7.94	.175	4.44
19120-0059	B-683-08X	.312	7.94	.175	4.44
19120-0061	B-683-10X	.312	7.94	.175	4.44
19120-0063	B-686-04X	.312	7.94	.175	4.44
19120-0065	B-686-06X	.312	7.94	.175	4.44
19120-0067	B-686-08X	.312	7.94	.175	4.44
19121-0025	BB-216-04X	.234	5.95	.175	4.41
19121-0026	BB-216-06X	.234	5.95	.175	4.41
19121-0028	BB-216-08X	.234	5.95	.175	4.41
19121-0030	BB-216-10X	.234	5.95	.175	4.41
19121-0032	BB-2491-06X	.234	5.95	.175	4.44
19121-0033	BB-2491-08X	.234	5.95	.175	4.44
19121-0034	BB-2491-10X	.234	5.95	.175	4.44
19121-0035	BB-280-06X	.234	5.95	.175	4.44
19121-0036	BB-280-08X	.234	5.95	.175	4.44
19121-0037	BB-280-10X	.234	5.95	.175	4.44
19121-0038	BB-283-06X	.234	5.95	.175	4.44
19121-0039	BB-283-08X	.234	5.95	.175	4.44
19121-0040	BB-283-10X	.234	5.95	.175	4.44
19121-0042	BB-286-04X	.234	5.95	.175	4.44
19121-0043	BB-286-06X	.234	5.95	.175	4.44
19121-0044	BB-286-08X	.234	5.95	.175	4.44
19122-0029	BB-616-04X	.234	5.95	.175	4.44
19122-0031	BB-616-06X	.234	5.95	.175	4.44
19122-0033	BB-616-08X	.234	5.95	.175	4.44
19122-0036	BB-680-06X	.234	5.95	.175	4.44
19122-0038	BB-680-08X	.234	5.95	.175	4.44
19122-0040	BB-680-10X	.234	5.95	.175	4.44
19122-0042	BB-683-06X	.234	5.95	.175	4.44
19122-0044	BB-683-08X	.234	5.95	.175	4.44
19122-0046	BB-683-10X	.234	5.95	.175	4.44
19122-0048	BB-686-04X	.234	5.95	.175	4.44
19122-0050	BB-686-06X	.234	5.95	.175	4.44
19122-0052	BB-686-08X	.234	5.95	.175	4.44
19125-0031	B-516-04	.312	7.94	.170	4.31
19125-0033	B-516-06	.312	7.94	.170	4.31
19125-0035	B-516-08	.312	7.94	.170	4.31
19125-0037	B-516-10	.312	7.94	.170	4.31
19125-0046	B-5491-06	.312	7.94	.170	4.31
19125-0047	B-5491-08	.312	7.94	.170	4.31
19125-0048	B-5491-10	.312	7.94	.170	4.31
19125-0049	B-580-06	.312	7.94	.170	4.31
19125-0051	B-580-08	.312	7.94	.170	4.31
19125-0053	B-580-10	.312	7.94	.170	4.31
19125-0055	B-583-06	.312	7.94	.170	4.31
19125-0057	B-583-08	.312	7.94	.170	4.31
19125-0059	B-583-10	.312	7.94	.170	4.31
19125-0061	B-586-04	.312	7.94	.170	4.31
19125-0063	B-586-06	.312	7.94	.170	4.31
19125-0065	B-586-08	.312	7.94	.170	4.31

Wire Size: 14 – 16 AWG 2.00 – 1.30mm²					
Terminal No.	Terminal Eng No. (REF)	Wire Strip Length		Insul. Dia. Max.	
		In	mm	In	mm
19126-0005	B-816-06	.312	7.94	.170	4.31
19126-0007	B-816-10	.312	7.94	.170	4.31
19126-0023	B-816-08	.312	7.94	.170	4.31
19127-0037	BB-816-04	.250	6.35	.170	4.31
19127-0039	BB-816-06	.250	6.35	.170	4.31
19127-0042	BB-816-08	.250	6.35	.170	4.31
19127-0046	BB-8491-06	.250	6.35	.170	4.31
19127-0048	BB-8491-08	.250	6.35	.170	4.31
19127-0050	BB-8491-10	.250	6.35	.170	4.31
19127-0052	BB-880-06	.250	6.35	.170	4.31
19127-0054	BB-880-08	.250	6.35	.170	4.31
19127-0056	BB-880-10	.250	6.35	.170	4.31
19127-0058	BB-883-06	.250	6.35	.170	4.31
19127-0060	BB-883-08	.250	6.35	.170	4.31
19127-0065	BB-886-04	.250	6.35	.170	4.31
19127-0099	BB-816-10	.250	6.35	.170	4.31
19130-0010	B-2471-04X	.312	7.94	.175	4.44
19130-0011	B-2471-06X	.312	7.94	.175	4.44
19130-0038	B-2491-06X	.312	7.94	.175	4.44
19130-0039	B-2491-08X	.312	7.94	.175	4.44
19130-0040	B-2491-10X	.312	7.94	.175	4.44
19130-0044	B-2781-06X	.312	7.94	.175	4.44
19130-0045	B-2781-08X	.312	7.94	.175	4.44
19130-0046	B-2781-10X	.312	7.94	.175	4.44
19131-0007	BB-287-08X	.234	5.95	.175	4.44
19131-0009	BB-287-06X	.234	5.95	.175	4.44
19131-0011	BB-287-04X	.234	5.95	.175	4.44
19131-0013	BB-284-10X	.234	5.95	.175	4.44
19131-0014	BB-2781-10X	.234	5.95	.175	4.44
19131-0015	BB-284-08X	.234	5.95	.175	4.44
19131-0017	BB-284-06X	.234	5.95	.175	4.44
19131-0018	BB-2781-08X	.234	5.95	.175	4.44
19131-0020	BB-2781-06X	.234	5.95	.175	4.44
19131-0021	BB-2781-04X	.234	5.95	.175	4.44
19131-0023	BB-2471-06X	.234	5.95	.175	4.44
19131-0025	BB-2471-04X	.234	5.95	.175	4.44
19137-0019	B-5471-04	.312	7.94	.170	4.31
19137-0020	B-5471-06	.312	7.94	.170	4.31
19137-0021	B-5781-04	.312	7.94	.170	4.31
19137-0022	B-5781-06	.312	7.94	.170	4.31
19137-0023	B-5781-08	.312	7.94	.170	4.31
19137-0024	B-5781-10	.312	7.94	.170	4.31
19137-0025	B-581-06	.312	7.94	.170	4.31
19137-0026	B-581-08	.312	7.94	.170	4.31
19137-0027	B-581-10	.312	7.94	.170	4.31
19137-0028	B-584-06	.312	7.94	.170	4.31
19137-0029	B-584-08	.312	7.94	.170	4.31
19137-0030	B-584-10	.312	7.94	.170	4.31
19137-0031	B-587-04	.312	7.94	.170	4.31
19137-0032	B-587-06	.312	7.94	.170	4.31
19137-0033	B-587-08	.312	7.94	.170	4.31
191380001	B-8781-06	.312	7.94	.170	4.31
191380003	B-8781-10	.312	7.94	.170	4.31
19139-0038	BB-8471-04	.250	6.35	.170	4.31
19139-0039	BB-8471-06	.250	6.35	.170	4.31
19139-0041	BB-8781-04	.250	6.35	.175	4.44
19139-0042	BB-8781-06	.250	6.35	.175	4.44
19139-0044	BB-8781-08	.250	6.35	.175	4.44
19139-0045	BB-8781-10	.250	6.35	.175	4.44
19142-0019	B-207-04X	.312	7.94	.175	4.44
19142-0020	B-207-06X	.312	7.94	.175	4.44
19142-0022	B-224-04X	.312	7.94	.175	4.44

Wire Size: 14 – 16 AWG 2.00 – 1.30mm²					
Terminal No.	Terminal	Wire Strip Length		Insul. Dia. Max.	
		In	mm	In	mm
19142-0024	B-224-06X	.312	7.94	.175	4.44
19142-0027	B-224-08X	.312	7.94	.175	4.44
19142-0029	B-227-06X	.312	7.94	.175	4.44
19142-0030	B-227-08X	.312	7.94	.175	4.44
19142-0032	B-227-10X	.312	7.94	.175	4.44
19142-0036	B-241-10HDX	.312	7.94		
19142-0040	B-268-14HDX	.312	7.94		
19142-0047	B-281-06X	.312	7.94	.175	4.44
19142-0048	B-281-08X	.312	7.94	.175	4.44
19142-0049	B-281-10X	.312	7.94	.175	4.44
19142-0050	B-284-06X	.312	7.94	.175	4.44
19142-0051	B-284-08X	.312	7.94	.175	4.44
19142-0052	B-284-10X	.312	7.94	.175	4.44
19142-0053	B-287-04X	.312	7.94	.175	4.44
19142-0054	B-287-06X	.312	7.94	.175	4.44
19142-0055	B-287-08X	.312	7.94	.175	4.44
19143-0039	B-607-04X	.312	7.94	.175	4.44
19143-0042	B-607-06X	.312	7.94	.175	4.44
19143-0045	B-624-04X	.312	7.94	.175	4.44
19143-0047	B-624-06X	.312	7.94	.175	4.44
19143-0050	B-624-08X	.312	7.94	.175	4.44
19143-0052	B-627-06X	.312	7.94	.175	4.44
19143-0054	B-627-08X	.312	7.94	.175	4.44
19143-0057	B-627-10X	.312	7.94	.175	4.44
19143-0071	B-6781-06X	.312	7.94	.175	4.44
19143-0072	B-6781-08X	.312	7.94	.175	4.44
19143-0073	B-6781-10X	.312	7.94	.175	4.44
19143-0074	B-681-06X	.312	7.94	.175	4.44
19143-0076	B-681-08X	.312	7.94	.175	4.44
19143-0078	B-681-10X	.312	7.94	.175	4.44
19143-0080	B-684-06X	.312	7.94	.175	4.44
19143-0082	B-684-08X	.312	7.94	.175	4.44
19143-0084	B-684-10X	.312	7.94	.175	4.44
19143-0086	B-687-04X	.312	7.94	.175	4.44
19143-0088	B-687-06X	.312	7.94	.175	4.44
19143-0090	B-687-08X	.312	7.94	.175	4.44
19144-0013	BB-207-04X	.234	5.95	.175	4.41
19144-0015	BB-207-06X	.234	5.95	.175	4.41
19144-0017	BB-224-04X	.234	5.95		
19144-0018	BB-224-06X	.234	5.95		
19144-0020	BB-224-08X	.234	5.95		
19144-0022	BB-227-06X	.234	5.95		
19144-0024	BB-227-08X	.234	5.95		
19144-0026	BB-227-10X	.234	5.95		
19144-0028	BB-281-06X	.234	5.95	.175	4.44
19144-0029	BB-281-08X	.234	5.95	.175	4.44
19144-0030	BB-281-10X	.234	5.95	.175	4.44
19145-0040	BB-607-04X	.234	5.95	.175	4.44
19145-0042	BB-607-06X	.234	5.95	.175	4.44
19145-0044	BB-624-04X	.234	5.95	.175	4.44
19145-0046	BB-624-06X	.234	5.95	.175	4.44
19145-0048	BB-624-08X	.234	5.95	.175	4.44
19145-0050	BB-627-06X	.234	5.95	.175	4.44
19145-0052	BB-627-08X	.234	5.95	.175	4.44
19145-0054	BB-627-10X	.234	5.95	.175	4.44
19145-0056	BB-681-06X	.234	5.95	.175	4.44
19145-0058	BB-681-08X	.234	5.95	.175	4.44
19145-0060	BB-681-10X	.234	5.95	.175	4.44
19145-0062	BB-684-06X	.234	5.95	.175	4.44
19145-0064	BB-684-08X	.234	5.95	.175	4.44
19145-0066	BB-684-10X	.234	5.95	.175	4.44
19145-0068	BB-687-04X	.234	5.95	.175	4.44

Wire Size: 14 – 16 AWG 2.00 – 1.30mm²					
Terminal No.	Terminal Eng No. (REF)	Wire Strip Length		Insul. Dia. Max.	
		In	mm	In	mm
19145-0070	BB-687-06X	.234	5.95	.175	4.44
19145-0072	BB-687-08X	.234	5.95	.175	4.44
19153-0005	MCT-2NF	.312	7.93		
19154-0013	B-231OV	.234	5.95	.175	4.44
19154-0015	B-231X	.234	5.95	.175	4.44
19154-0016	B-231X-B	.234	5.95	.175	4.44
19154-0020	B-L231X	.281	7.14		
19154-0023	BS-V-331X	.281	7.14		
19164-0040	SB-289	.281	7.14		
19171-0007	B-219-06X	.312	7.94	.175	4.44
19171-0009	B-219-08X	.312	7.94	.175	4.44
19171-0012	B-219-10X	.312	7.94	.175	4.44
19174-0007	B-519-06	.312	7.94	.170	4.31
19174-0009	B-519-08	.312	7.94	.170	4.31
19174-0011	B-519-10	.312	7.94	.170	4.31
19175-0007	B-619-06X	.312	7.94	.175	4.44
19175-0009	B-619-08X	.312	7.94	.175	4.44
19175-0011	B-619-10X	.312	7.94	.175	4.44
191760003	B-819-06	.312	7.94	.170	4.31
19179-0008	BB-219-06X	.234	5.95	.175	4.41
19179-0010	BB-219-08X	.234	5.95	.175	4.41
19179-0012	BB-219-10X	.234	5.95	.175	4.41
19182-0007	BB-619-06X	.234	5.95	.175	4.44
19182-0009	BB-619-08X	.234	5.95	.175	4.44
19182-0011	BB-619-10X	.234	5.95	.175	4.44
19183-0007	BB-819-06	.250	6.35	.170	4.31
19183-0009	BB-819-08	.250	6.35	.170	4.31
19183-0011	BB-819-10	.250	6.35	.170	4.31
19196-0024	B-507-04	.312	7.94	.170	4.31
19196-0026	B-507-06	.312	7.94	.170	4.31
19196-0030	B-524-04	.312	7.94	.170	4.31
19196-0032	B-524-06	.312	7.94	.170	4.31
19196-0034	B-524-08	.312	7.94	.170	4.31
19196-0037	B-527-06	.312	7.94	.170	4.31
19196-0039	B-527-08	.312	7.94	.170	4.31
19196-0041	B-527-10	.312	7.94	.170	4.31
191970037	B-824-08	.312	7.94	.170	4.31
191970042	B-807-06	.312	7.94	.170	4.31
19198-0010	BB-807-04	.250	6.35	.170	4.31
19198-0012	BB-807-06	.250	6.35	.170	4.31
19198-0014	BB-824-04	.250	6.35		
19198-0016	BB-824-06	.250	6.35	.225	5.71
19198-0019	BB-824-08	.250	6.35	.225	5.71
19198-0021	BB-827-06	.250	6.35	.170	4.31
19198-0023	BB-827-08	.250	6.35	.170	4.31
19198-0025	BB-827-10	.250	6.35	.170	4.31
19198-0028	BB-881-06	.250	6.35	.170	4.31
19198-0029	BB-881-08	.250	6.35	.170	4.31
19198-0030	BB-881-10	.250	6.35	.170	4.31
19198-0031	BB-884-06	.250	6.35	.170	4.31
19198-0032	BB-884-08	.250	6.35	.170	4.31
19198-0033	BB-884-10	.250	6.35	.170	4.31
19198-0034	BB-887-04	.250	6.35	.170	4.31
19199-0003	B-831	.312	7.94	.170	4.31
19200-0001	BS-831	.312	7.93	.169	4.29
19202-0018	B-931	.312	7.94		
19202-0019	B-931-DK	.312	7.94		
19202-0026	BS-942	.312	7.93	.199	5.05
19202-0027	BS-942-DK	.312	7.93	.199	5.05
19202-0031	BS-N-331	.281	7.14		
19204-0013	B-2XCX	.312	7.94		
19204-0014	B-2YCX	.312	7.94		

Wire Size: 14 – 16 AWG 2.00 – 1.30mm²					
Terminal No.	Terminal	Wire Strip Length		Insul. Dia. Max.	
		In	mm	In	mm
19204-0017	B-5XC	.312	7.94		
19204-0018	B-5YC	.312	7.94		
19206-0003	B-2040V	.281	7.14		
19206-0004	B-204X	.281	7.14	.175	4.44
19206-0005	BS-V-304X	.281	7.14		
19207-0004	BS-N-304	.281	7.14		
19212-0005	WP-2614X	.187	4.76	.175	4.44
19213-0005	WP-5614	.187	4.76	.170	4.31
19213-0011	WP-8614	.187	4.76	.170	4.31

STEP DOWN BUTT SPLICE Wire Size: 14 – 16 AWG 2.00 – 1.30mm² to 18 - 22 AWG .080-0.35mm²					
Terminal No.	Terminal Eng. No. (REF)	Wire Strip Length		Insul. Dia. Max.	
		In	mm	In	mm
19154-0022	BA-631X	.281	7.14	.175	4.45

MILITARY CLASS 2 Wire Size: 14 – 16 AWG 2.00 – 1.30 mm²					
Terminal No.	Terminal Eng No. (REF)	Wire Strip Length		Insul. Dia. Max.	
		In	mm	In	mm
19095-0074	BB-882-2	.250	6.35	0.17	4.36
19095-0076	BB-883-2	.250	6.35	0.17	4.36
19095-0133	BB-880-2	.250	6.35	0.17	4.36
19095-0134	BB-881-2	.250	6.35	0.17	4.36
19095-0136	BB-884-2	.250	6.35	0.17	4.36
19095-0137	BB-885-2	.250	6.35	0.17	4.36
19095-0139	BB-886-2	.250	6.35	0.17	4.36

Wire Size: 10 – 12 AWG 5.00 – 3.00mm²					
Terminal No.	Terminal Eng No. (REF)	Wire Strip Length		Insul. Dia. Max.	
		In	mm	In	mm
19058-0154	TT-1210	.375	9.53		
19070-0109	C-201-12X	.375	9.53	.250	6.35
19070-0111	C-201-14X	.375	9.53	.250	6.35
19070-0112	C-201-38X	.375	9.53	.250	6.35
19070-0114	C-201-56X	.375	9.53	.250	6.35
19070-0115	C-201-76X	.375	9.53	.250	6.35
19070-0117	C-228-04X	.375	9.53	.250	6.35
19070-0119	C-228-06X	.375	9.53	.250	6.35
19070-0121	C-228-08X	.375	9.53	.250	6.35
19070-0123	C-228-10X	.375	9.53	.250	6.35
19070-0126	C-228-10XT45	.375	9.53	.250	6.35
19070-0130	C-230-10X	.375	9.53	.250	6.35
19070-0132	C-230-14X	.375	9.53	.250	6.35
19070-0134	C-230-38X	.375	9.53	.250	6.35
19070-0136	C-230-56X	.375	9.53	.250	6.35
19070-0141	C-236-04X	.375	9.53	.250	6.35
19070-0143	C-236-06X	.375	9.53	.250	6.35
19070-0145	C-236-08X	.375	9.53	.250	6.35
19070-0148	C-240-10X	.375	9.53	.250	6.35
19070-0150	C-240-14X	.375	9.53	.250	6.35
19070-0153	C-240-38X	.375	9.53	.250	6.35
19070-0155	C-240-56X	.375	9.53	.250	6.35
19070-0275	C-236-08XR90	.375	9.53	.250	6.35
19070-0336	C-236-06XR90	.375	9.53	.250	6.35
19071-0084	C-601-12X	.375	9.53	.250	6.35
19071-0085	C-601-14X	.375	9.53	.250	6.35
19071-0086	C-601-38X	.375	9.53	.250	6.35
19071-0087	C-601-56X	.375	9.53	.250	6.35
19071-0088	C-601-76X	.375	9.53	.250	6.35
19071-0089	C-628-04X	.375	9.53	.250	6.35

Wire Size: 10 – 12 AWG 5.00 – 3.00mm²					
Terminal No.	Terminal Eng No. (REF)	Wire Strip Length		Insul. Dia. Max.	
		In	mm	In	mm
19071-0092	C-628-06X	.375	9.53	.250	6.35
19071-0095	C-628-08X	.375	9.53	.250	6.35
19071-0098	C-628-10X	.375	9.53	.250	6.35
19071-0100	C-628-209X	.375	9.53	.250	6.35
19071-0103	C-630-10X	.375	9.53	.250	6.35
19071-0106	C-630-14X	.375	9.53	.250	6.35
19071-0110	C-630-56X	.375	9.53	.250	6.35
19071-0115	C-636-04X	.375	9.53	.250	6.35
19071-0117	C-636-06X	.375	9.53	.250	6.35
19071-0119	C-636-08X	.375	9.53	.250	6.35
19071-0121	C-640-10X	.375	9.53	.250	6.35
19071-0123	C-640-14X	.375	9.53	.250	6.35
19071-0127	C-640-38X	.375	9.53	.250	6.35
19071-0130	C-640-56X	.375	9.53	.250	6.35
19073-0101	C-501-12	.375	9.53	.225	5.17
19073-0102	C-501-14	.375	9.53	.225	5.17
19073-0103	C-501-38	.375	9.53	.225	5.17
19073-0104	C-501-56	.375	9.53	.225	5.17
19073-0105	C-501-76	.375	9.53	.225	5.17
19073-0106	C-528-04	.375	9.53	.225	5.17
19073-0108	C-528-06	.375	9.53	.225	5.17
19073-0110	C-528-08	.375	9.53	.225	5.17
19073-0113	C-528-10	.375	9.53	.225	5.17
19073-0117	C-530-10	.375	9.53	.225	5.17
19073-0119	C-530-14	.375	9.53	.225	5.17
19073-0122	C-530-38	.375	9.53	.225	5.17
19073-0123	C-530-56	.375	9.53	.225	5.17
19073-0128	C-536-04	.375	9.53	.225	5.17
19073-0130	C-536-06	.375	9.53	.225	5.17
19073-0132	C-536-08	.375	9.53	.225	5.17
19073-0134	C-540-10	.375	9.53	.225	5.17
19073-0136	C-540-14	.375	9.53	.225	5.17
19073-0139	C-540-38	.375	9.53	.225	5.17
19073-0143	C-540-56	.375	9.53	.225	5.17
19073-0145	C-801-12	.375	9.53	.225	5.71
19073-0147	C-801-12X	.375	9.53	.225	5.71
19073-0148	C-801-14	.375	9.53	.225	5.71
19073-0149	C-801-14X	.375	9.53	.225	5.71
19073-0150	C-801-38	.375	9.53	.225	5.71
19073-0151	C-801-38X	.281	7.14	.225	5.71
19073-0152	C-801-56	.375	9.53	.225	5.71
19073-0153	C-801-56X	.281	7.14	.225	5.71
19073-0154	C-801-76	.375	9.53	.225	5.71
19073-0155	C-801-76X	.281	7.14	.225	5.71
19073-0156	C-828-04	.375	9.53	.225	5.71
19073-0158	C-828-04X	.281	7.14	.225	5.71
19073-0160	C-828-06	.375	9.53	.225	5.71
19073-0163	C-828-06X	.281	7.14	.225	5.71
19073-0165	C-828-08	.375	9.53	.225	5.71
19073-0168	C-828-08X	.281	7.14	.225	5.71
19073-0170	C-828-10	.375	9.53	.225	5.71
19073-0173	C-828-10X	.281	7.14	.225	5.71
19073-0176	C-828-209	.375	9.53	.225	5.71
19073-0179	C-830-10	.375	9.53	.225	5.71
19073-0181	C-830-10X	.281	7.14	.225	5.71
19073-0182	C-830-10XLBK	.375	9.53	.225	5.71
19073-0185	C-830-10XX	.375	9.53	.225	5.71
19073-0188	C-830-14	.375	9.53	.225	5.71
19073-0191	C-830-14X	.281	7.14	.225	5.71
19073-0192	C-830-14XLBK	.375	9.53	.233	5.91
19073-0195	C-830-14XX	.375	9.53	.320	8.12
19073-0200	C-830-56	.375	9.53	.233	5.91

Wire Size: 10 – 12 AWG 5.00 – 3.00mm²					
Terminal No.	Terminal	Wire Strip Length		Insul. Dia. Max.	
		In	mm	In	mm
19073-0202	C-830-56X	.281	7.14	.250	6.35
19073-0203	C-830-56XLBK	.375	9.53	.233	5.91
19073-0206	C-830-56XX	.375	9.53	.320	8.12
19073-0212	C-836-04	.375	9.53	.225	5.71
19073-0214	C-836-04X	.281	7.14	.250	6.35
19073-0216	C-836-06	.375	9.53	.225	5.71
19073-0220	C-836-06X	.281	7.14	.250	6.35
19073-0222	C-836-08	.375	9.53	.225	5.71
19073-0225	C-836-08X	.281	7.14	.250	6.35
19073-0227	C-840-10	.375	.953	.225	5.71
19073-0229	C-840-10X	.281	7.14	.250	6.35
19073-0231	C-840-14	.375	9.53	.225	5.71
19073-0233	C-840-14X	.281	7.14	.250	6.35
19073-0236	C-840-38	.375	9.53	.225	5.71
19073-0238	C-840-38X	.281	7.14	.250	6.35
19073-0242	C-840-56	.375	9.53	.225	5.71
19073-0244	C-840-56X	.281	7.14	.250	6.35
19073-0272	C-830-10XXBK	.375	9.53	.225	5.71
19073-0273	C-830-14XXBK	.375	9.53	.320	8.12
19073-0274	C-830-56XXBK	.375	9.53	.320	8.12
19080-0005	C-2006-MSX	.375	9.53	.250	6.35
19081-0005	C-5006-MS	.375	9.53	.225	5.17
19090-0077	C-2103-08X	.375	9.53	.250	6.35
19090-0079	C-2106-06X	.375	9.53	.250	6.35
19090-0081	C-212-06X	.375	9.53	.250	6.35
19090-0083	C-212-08X	.375	9.53	.250	6.35
19090-0085	C-212-10X	.375	9.53	.250	6.35
19092-0065	C-6103-08X	.375	9.53	.250	6.35
19092-0067	C-6106-06X	.375	9.53	.250	6.35
19092-0069	C-612-06X	.375	9.53	.250	6.35
19092-0071	C-612-08X	.375	9.53	.250	6.35
19092-0073	C-612-10X	.375	9.53	.250	6.35
19094-0081	C-5103-08	.375	9.53	.225	5.17
19094-0083	C-5106-06	.375	9.53	.225	5.17
19094-0085	C-512-06	.375	9.53	.225	5.17
19094-0087	C-512-08	.375	9.53	.225	5.17
19094-0089	C-512-10	.375	9.53	.225	5.17
19095-0099	C-8103-08	.375	9.53	.225	5.71
19095-0102	C-8106-06	.375	9.53	.225	5.71
19095-0105	C-812-06	.375	9.53	.225	5.71
19095-0108	C-812-08	.375	9.53	.225	5.71
19095-0111	C-812-10	.375	9.53	.225	5.71
19099-0036	C-2196-06X	.375	9.53	.250	6.35
19099-0038	C-2197-08X	.375	9.53	.250	6.35
19099-0040	C-2198-10X	.375	9.53	.250	6.35
19099-0042	C-2199-14X	.375	9.53	.250	6.35
19099-0043	C-2710-05X	.375	9.53	.250	6.35
19099-0044	C-2710-06X	.375	9.53	.250	6.35
19099-0048	C-2718-08X	.375	9.53	.250	6.35
19099-0050	C-2719-10X	.375	9.53	.250	6.35
19115-0033	C-8196-06	.375	9.53	.225	5.71
19115-0035	C-8197-08	.375	9.53	.225	5.71
19115-0037	C-8198-10	.375	9.53	.225	5.71
19115-0039	C-8199-14	.375	9.53	.225	5.71
19115-0041	C-8710-05	.375	9.53	.225	5.71
19115-0042	C-8710-06	.375	9.53	.225	5.71
19115-0046	C-8718-08	.375	9.53	.225	5.71
19115-0048	C-8719-10	.375	9.53	.225	5.71
19121-0045	C-2101-08X	.375	9.53	.250	6.35
19121-0046	C-2104-06X	.375	9.53	.250	6.35
19121-0047	C-2104-08X	.375	9.53	.250	6.35
19121-0049	C-2104-10X	.375	9.53	.250	6.35

Wire Size: 10 – 12 AWG 5.00 – 3.00mm²					
Terminal No.	Terminal Eng No. (REF)	Wire Strip Length		Insul. Dia. Max.	
		In	mm	In	mm
19121-0051	C-217-06X	.375	9.53	.250	6.35
19121-0053	C-217-08X	.375	9.53	.250	6.35
19121-0056	C-217-10X	.375	9.53	.250	6.35
19122-0054	C-6101-08X	.375	9.53	.250	6.35
19122-0056	C-6104-06X	.375	9.53	.250	6.35
19122-0060	C-617-06X	.375	9.53	.250	6.35
19122-0062	C-617-08X	.375	9.53	.250	6.35
19122-0064	C-617-10X	.375	9.53	.250	6.35
19125-0067	C-5101-08	.375	9.53	.225	5.17
19125-0070	C-5104-06	.375	9.53	.225	5.17
19125-0074	C-517-06	.375	9.53	.225	5.17
19125-0076	C-517-08	.375	9.53	.225	5.17
19125-0078	C-517-10	.375	9.53	.225	5.17
19127-0073	C-8101-08	.375	9.53	.225	5.71
19127-0077	C-8104-06	.375	9.53	.225	5.71
19127-0079	C-8104-06X	.281	7.14	.225	5.71
19127-0081	C-8104-08	.375	9.53	.225	5.71
19127-0082	C-8104-10	.375	9.53	.225	5.71
19127-0083	C-817-06	.375	9.53	.225	5.71
19127-0086	C-817-08	.375	9.53	.225	5.71
19127-0089	C-817-10	.375	9.53	.225	5.71
19127-0091	C-817-10X	.281	7.14	.225	5.71
19127-0101	C-8101-08X	.281	7.14	.225	5.71
19127-0102	C-817-06X	.281	7.14	.225	5.71
19127-0103	C-817-08X	.281	7.14	.225	5.71
19131-0001	C-2481-10X	.375	9.53	.250	6.35
19131-0002	C-2105-10X	.375	9.53	.250	6.35
19131-0004	C-2105-08X	.375	9.53	.250	6.35
19131-0006	C-2105-06X	.375	9.53	.250	6.35
19131-0010	C-2102-08X	.375	9.53	.250	6.35
19137-0035	C-5102-08	.375	9.53	.225	5.17
19137-0038	C-5105-06	.375	9.53	.225	5.17
19137-0040	C-5105-08	.375	9.53	.225	5.17
19137-0041	C-5105-10	.375	9.53	.225	5.17
19139-0057	C-8102-08	.375	9.53	.225	5.71
19139-0060	C-8105-08	.375	9.53	.225	5.71
19139-0061	C-8105-10	.375	9.53	.225	5.71
19144-0037	C-241-06X	.375	9.53	.250	6.35
19144-0039	C-241-08X	.375	9.53	.250	6.35
19144-0040	C-241-08XR90	.375	9.53	.250	6.35
19144-0042	C-241-10X	.375	9.53	.250	6.35
19144-0045	C-268-10X	.375	9.53	.250	6.35
19144-0046	C-268-14X	.375	9.53	.250	6.35
19144-0047	C-268-56X	.375	9.53	.250	6.35
19145-0075	C-6102-08X	.375	9.53	.250	6.35
19145-0078	C-6105-06X	.375	9.53	.250	6.35
19145-0082	C-641-06X	.375	9.53	.250	6.35
19145-0084	C-641-08X	.375	9.53	.250	6.35
19145-0088	C-641-10X	.375	9.53	.250	6.35
19145-0091	C-668-10X	.375	9.53	.250	6.35
19145-0093	C-668-14X	.375	9.53	.250	6.35
19145-0094	C-668-56X	.375	9.53	.250	6.35
19153-0003	CMCT-2NF	.281	7.14		
19154-0026	C-2460V	.234	5.95		
19154-0028	C-246X	.234	5.95	.265	6.73
19154-0029	C-246X-B	.234	5.95	.270	6.85
19154-0033	C-L246X	.359	9.13		
19154-0035	CB-646X	.281	7.14		
19154-0037	CS-V-346X	.359	9.13	.260	6.60
19179-0014	C-211-06X	.375	9.53	.250	6.35
19179-0016	C-211-08X	.375	9.53	.250	6.35
19179-0019	C-211-10X	.375	9.53	.250	6.35

Wire Size: 10 – 12 AWG 5.00 – 3.00mm²					
Terminal No.	Terminal	Wire Strip Length		Insul. Dia. Max.	
		In	mm	In	mm
19179-0021	C-299-14X	.375	9.53	.250	6.35
19179-0022	C-299-56X	.375	9.53	.250	6.35
19182-0016	C-699-14X	.375	9.53	.250	6.35
19182-0017	C-699-56X	.375	9.53	.250	6.35
19183-0013	C-811-06	.375	9.53	.225	5.71
19183-0016	C-811-08	.375	9.53	.225	5.71
19183-0019	C-811-10	.375	9.53	.225	5.71
19183-0022	C-899-14	.375	9.53	.225	5.71
19183-0026	C-899-56	.375	9.53	.225	5.71
19183-0028	C-899-14X	.281	7.14		
19183-0029	C-811-08X	.281	7.14	.225	5.71
19183-0031	C-811-10X	.281	7.14	.225	5.71
19184-0001	C-511-06	.375	9.53	.225	5.17
19184-0003	C-511-08	.375	9.53	.225	5.17
19184-0005	C-511-10	.375	9.53	.225	5.17
19184-0007	C-599-14	.375	9.53	.225	5.17
19184-0008	C-599-56	.375	9.53	.225	5.17
19196-0068	C-541-10	.375	9.53	.225	5.17
19196-0071	C-568-10	.375	9.53	.225	5.17
19196-0072	C-568-14	.375	9.53	.225	5.17
19196-0074	C-568-56	.375	9.53	.225	5.17
19196-0075	C-541-06	.375	9.53	.225	5.17
19196-0077	C-541-08	.375	9.53	.225	5.17
19198-0039	C-8105-06	.375	9.53	.225	5.71
19198-0044	C-841-06	.375	9.53	.225	5.71
19198-0047	C-841-08	.375	9.53	.225	5.71
19198-0050	C-841-10	.375	9.53	.225	5.71
19198-0055	C-868-10	.375	9.53	.225	5.71
19198-0056	C-868-14	.375	9.53	.225	5.71
19198-0057	C-868-14X	.281	7.14	.250	6.35
19198-0058	C-868-56	.375	9.53	.225	5.71
19198-0078	C-841-08X	.281	7.14	.250	6.35
19198-0085	C-841-10X	.281	7.14	.250	6.35
19199-0005	C-846	.312	7.94	.228	5.79
19200-0003	CS-846	.312	7.94	.230	5.84
19202-0045	CS-952	.359	9.13	.276	
19202-0046	CS-952-DK	.359	9.13	.276	
19202-0049	CS-N-346	.359	9.13		
19204-0019	C-8XC	.375	9.53		
19204-0025	C-2XCX	.375	9.53	.250	6.35
19204-0026	C-2YCX	.375	9.53	.250	6.35
19204-0029	C-5XC	.375	9.53		
19204-0030	C-5YC	.375	9.53		
19204-0031	C-8YC	.375	9.53		
19206-0007	C-2030V	.281	7.14		
19206-0008	C-203X	.281	7.14		
19207-0005	CS-N-303	.281	7.14		
19212-0001	WP-2210X	.281	7.14	.250	6.35
19213-0001	WP-5210	.281	7.14	.220	5.58
19213-0007	WP-8210	.281	7.14	.225	5.71

STEP DOWN BUTT SPLICE Wire Size: 10 – 12 AWG 5.00 – 3.00mm² to 14 - 16 AWG 2.00-1.30mm²					
Terminal No.	Terminal Eng No. (REF)	Wire Strip Length		Insul. Dia. Max.	
		In	mm	In	mm
19154-0035	CB-646X	.281	7.14	.260	6.60

OPERATION

Refer to the instruction manual for the 19279-0001 (AT-200) for mounting this crimp tool head.

Crimping Terminals

1. Adjust the locator up or down until the terminal being run sits flat and straight in the tool.
2. Insert the wire into the terminal. Push up on the locator blade and push the terminal and wire with the barrel facing up into the proper color-coded nest with front edge of the barrel against the locator (See Figure 1). Release the locator blade to hold the terminal in position.

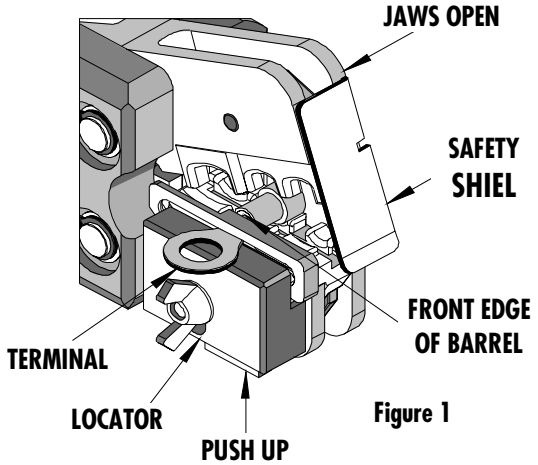

Figure 1

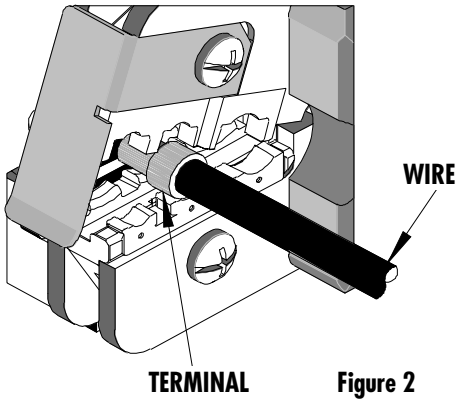

Figure 2

Caution: Never operate this tool without the supplied safety shield in place. Never place fingers in the tool nests.

3. Push on wire to assure it is still fully seated in the terminal. See Figure 2 and 3. Cycle the tool.
4. Lift the locator blade or wire stop and remove the crimped terminal. Inspect for proper crimp location, and check for insulation closure. Locator is adjustable up and down to keep terminals straight after crimping.
5. When crimping butt splices the locator must be removed and the splice visually aligned with the tooling 1/16" inside the insulation crimp. See Figure 4.

Note: Whenever crimping without the locator, make sure the seam of the terminal is oriented up or down in the tool if using unbrazed product, as this will provide higher pull force values.

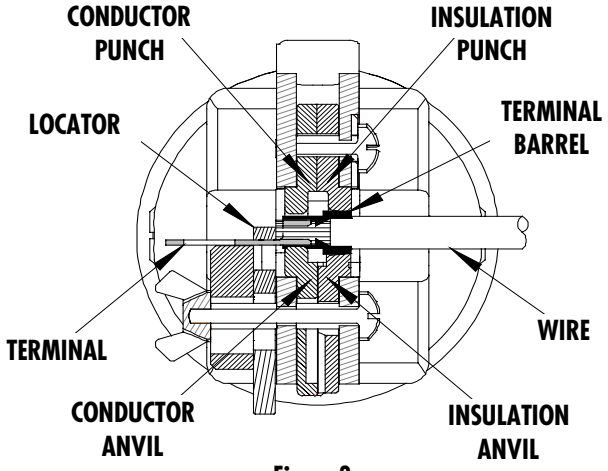

Figure 3

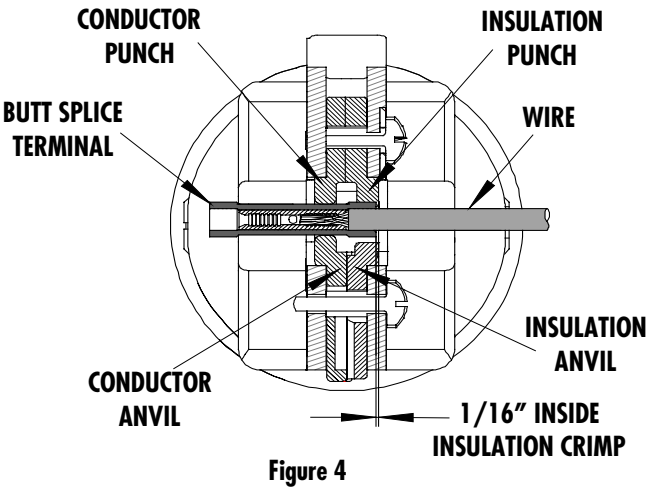

Figure 4

6. If the insulation part of the crimp needs to be adjusted, first disconnect air source and loosen the M4 screw on the bottom tool jaw, then insert a 3/32" hex wrench (supplied) into the bottom of the lower die (See Figure 5). A clockwise (CW) rotation decreases insulation crimp while a counter-clockwise (CCW) rotation increases insulation crimp. After adjusting retighten the M4 screw. Reconnect air source.

Maintenance

It is recommended that each operator of the tool be made aware of, and responsible for, the following maintenance steps:

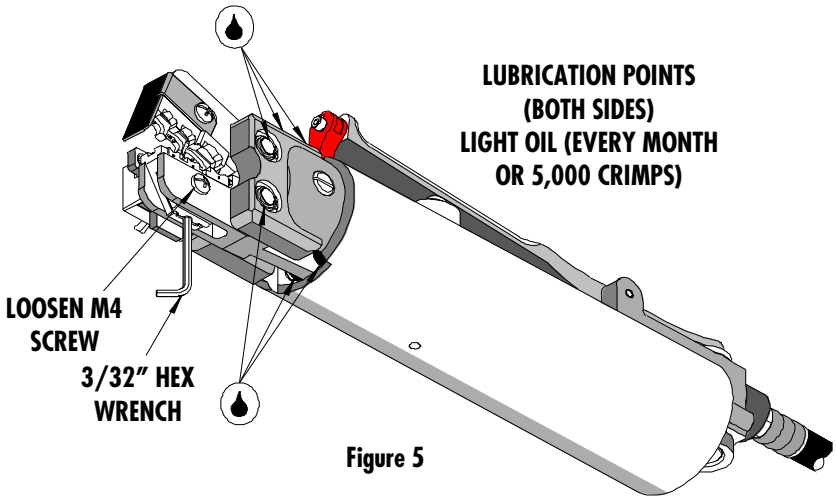

Figure 5

1. Remove dust, moisture and other contaminants with a clean brush, or soft, lint-free cloth.
2. Do not use any abrasive materials that could damage the tool.
3. Make certain all pins; pivot points and bearing surfaces are protected with a thin coat of high quality machine oil. Do not oil excessively. This tool was engineered for durability, but like any fine piece of equipment it needs cleaning and lubrication for a maximum service life of trouble-free crimping. A light oil, such as 30 weight automotive oil, used at the oil points shown in Figure 5, every 5,000 crimps or monthly will significantly enhance the tool life and ensure a stable calibration.
4. When tool is not in use store the tool in a clean, dry area.

Tool Calibration

A Certificate of Calibration (see last page) was supplied with the tool. To recalibrate this tool, pin gauge measurements should be taken in each conductor nest and compared to this chart. The tool should be lubricated prior to recalibration to ensure consistent measurements.

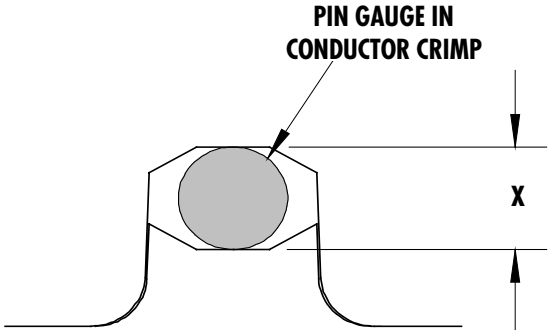

"Confining" Crimp

Nest Color Code	Wire Range		"X" Dimension Conductor Crimp			Crimp Inspection Marking
	AWG	mm²	Mean	Go	No Go	
Red	18 - 22	0.35 - 0.80	.108	.104	.112	o
Blue	14 - 16	1.30 - 2.00	.117	.112	.122	o o
Yellow	10 - 12	3.30 - 5.00	.147	.143	.152	o

Warranty

This tool is for electrical terminal crimping purposes only. This tool is made of the best quality materials. All vital components are long-life tested. All tools are warranted to be free of manufacturing defects for a period of **30 days.** Should such a defect occur, we would repair or exchange the tool free of charge. This repair or exchange will not be applicable to altered, misused or damaged tools.

PARTS LIST

Item	Order No	Description	Quantity
	64005-0100	**Crimp Tool Head**	**Figure 6**
1	64005-0000	Basic Air Tool Head	1
2	64005-0175	Locator Assembly	1
3	64001-0170	Tooling Kit	1
Tooling Kit Only			
4	64001-0114	Conductor Punch	1
5	64001-0112	Conductor Anvil	1
6	64001-0115	Insulation Punch	1
7	64001-0113	Insulation Anvil	1
8	N/A	4 mm Dia. by 5.0mm Long Roll Pins	2**
9	N/A	#10-32 by 5/16" Long Cup Point Set Screw	1**

** The following purchased parts are available from an Industrial supply company such as MSC (1-800-645-7270).

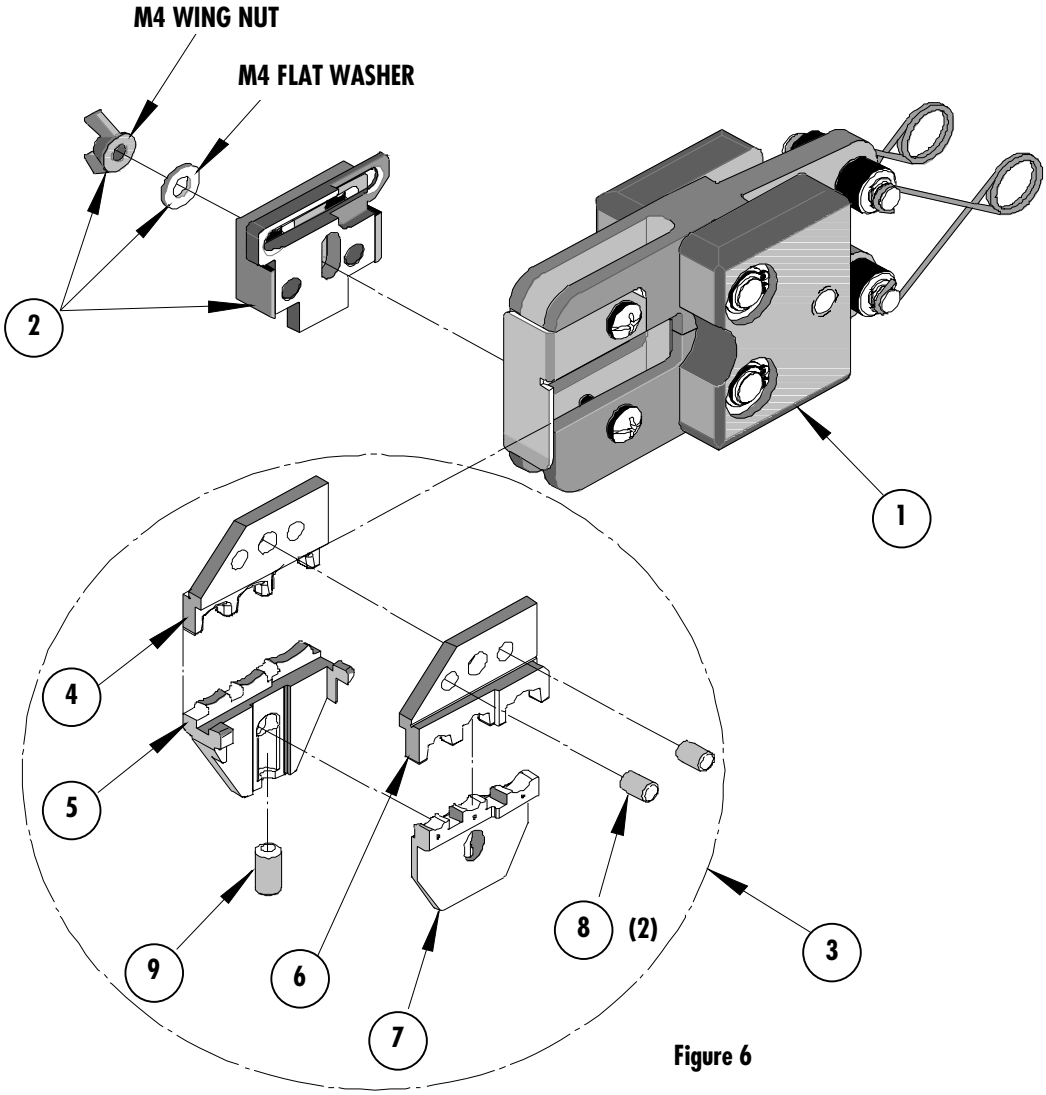

Figure 6

Parts List (Continued)

Item	Order No.	Description	Quantity
	64005-0000	**Basic Air Tool Head**	**Figure 7**
1	64005-0103	Nose Guard	1
2	64000-0077	Repair Kit (Springs, Rods Pivots ,Rings, and Washers)	1
3	N/A	M4 by 12 Long Freedrive Pan Head Screw	1**
4	N/A	M4 by 30 Long Freedrive Pan Head Screw	1**
5	N/A	3/16″ by 3/8″ Long Dowel Pin	1**

** The following purchased parts are available from an Industrial supply company such as (MSC 1-800-645-7270).

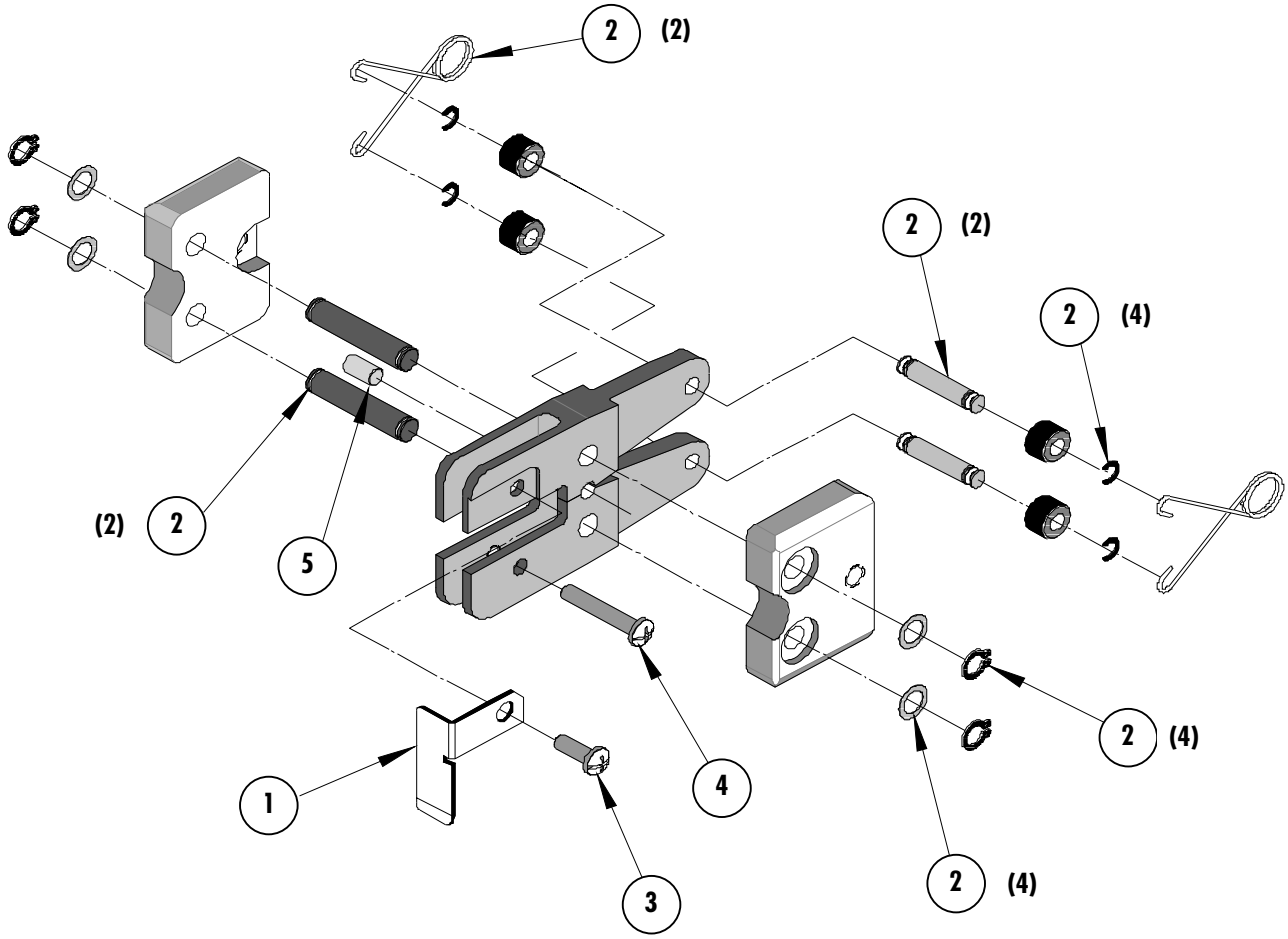

Figure 7

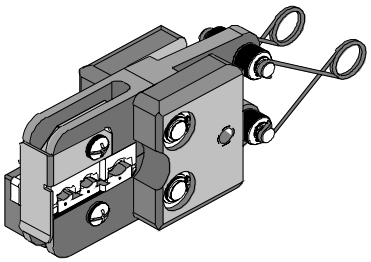

Certificate of Calibration

Tool Order Number _____

Tool Eng. Number_____

Tool Revision_____

Serial Number_____

Date of Manufacture

Pin Gauge of Conductor Nest/Nests or Slug height if the nest is the "F" Crimp style.

Range Conductor Nest # 1 = _____- Actual = _____-

Range Conductor Nest # 2 = _____- Actual = _____-

Range Conductor Nest # 3 = _____- Actual = _____-

Technician _____-

Date of Calibration _____-

Calibration should be done every 5,000 cycles or 3 months.
Tools should be lubricated during this operation.

Americas Headquarters
Lisle, Illinois 60532 U.S.A.
1-800-78MOLEX
amerinfo@molex.com

Far East North Headquarters
Yamato, Kanagawa, Japan
81-462-65-2324
feninfo@molex.com

Far East South Headquarters
Jurong, Singapore
65-6-268-6868
fesinfo@molex.com

European Headquarters
Munich, Germany
49-89-413092-0
eurinfo@molex.com

Corporate Headquarters
2222 Wellington Ct.
Lisle, IL 60532 U.S.A.
630-969-4550
Fax: 630-969-1352

Visit our Web site at http://www.molex.com